The right choice for the ultimate yield!

LS ELECTRIC strives to maximize your profits in gratitude for choosing us as your partner.

Programmable Logic Control

XGR CPU Module

XGT Series

User Manual

CPU	XGR-CPUH/F
	XGR-CPUH/T
	XGR-CPUH/S
Expansion drive	XGR-DBST
	XGR-DBSF(S)
	XGR-DBSH(S)
	XGR-DBDT
	XGR-DBDF(S)
	XGR-DBDH(S)

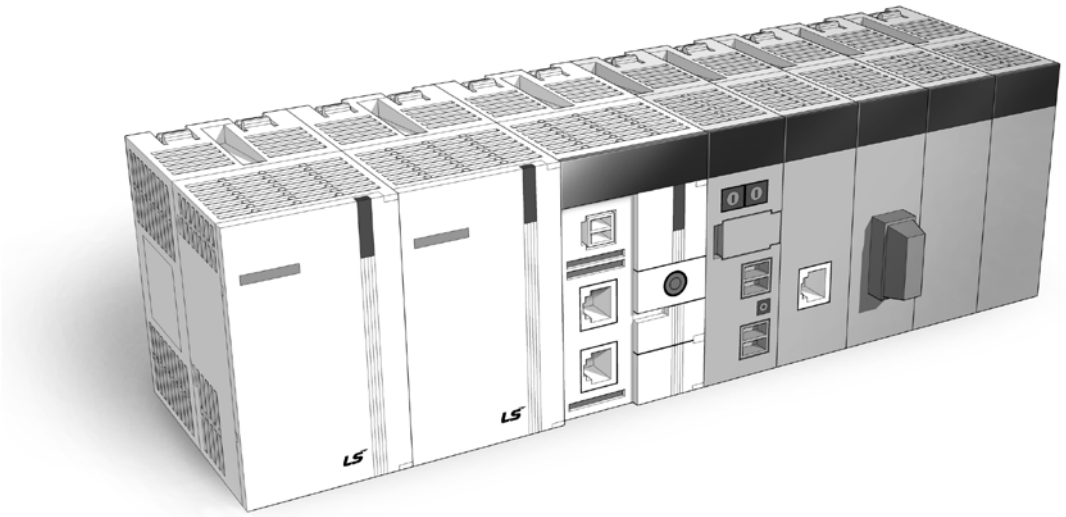

Safety Instructions

- Read this manual carefully before installing, wiring, operating, servicing or inspecting this equipment.
- Keep this manual within easy reach for quick reference.

LS ELECTRIC

Before using the product …

For your safety and effective operation, please read the safety instructions thoroughly before using the product.

- Safety Instructions should always be observed in order to prevent accident or risk with the safe and proper use the product.

- Instructions are separated into “Warning” and “Caution”, and the meaning of the terms is as follows;

⚠ **Warning**	This symbol indicates the possibility of serious injury or death if some applicable instruction is violated
⚠ **Caution**	This symbol indicates the possibility of slight injury or damage to products if some applicable instruction is violated

- The marks displayed on the product and in the user’s manual have the following meanings.

  ⚠ Be careful! Danger may be expected.

  ⚠ Be careful! Electric shock may occur.

- The user’s manual even after read shall be kept available and accessible to any user of the product.

Safety Instructions when designing

⚠ Warning

- **Please, install protection circuit on the exterior of PLC to protect the whole control system from any error in external power or PLC module.** Any abnormal output or operation may cause serious problem in safety of the whole system.
  - Install applicable protection unit on the exterior of PLC to protect the system from physical damage such as emergent stop switch, protection circuit, the upper/lowest limit switch, forward/reverse operation interlock circuit, etc.
  - If any system error (watch-dog timer error, module installation error, etc.) is detected during CPU operation in PLC, the whole output is designed to be turned off and stopped for system safety. However, in case CPU error if caused on output device itself such as relay or TR can not be detected, the output may be kept on, which may cause serious problems. Thus, you are recommended to install an addition circuit to monitor the output status.

- **Never connect the overload than rated to the output module nor allow the output circuit to have a short circuit**, which may cause a fire.

- **Never let the external power of the output circuit be designed to be On earlier than PLC power**, which may cause abnormal output or operation.

- **In case of data exchange between computer or other external equipment and PLC through communication or any operation of PLC (e.g. operation mode change), please install interlock in the sequence program to protect the system from any error**. If not, it may cause abnormal output or operation.

Safety Instructions when designing

⚠ Caution

- **I/O signal or communication line shall be wired at least 100mm away from a high-voltage cable or power line.** If not, it may cause abnormal output or operation.

Safety Instructions when designing

⚠ Caution

- **Use PLC only in the environment specified in PLC manual or general standard of data sheet.** If not, electric shock, fire, abnormal operation of the product or flames may be caused.
- **Before installing the module, be sure PLC power is off.** If not, electric shock or damage on the product may be caused.
- **Be sure that each module of PLC is correctly secured.** If the product is installed loosely or incorrectly, abnormal operation, error or dropping may be caused.
- **Be sure that I/O or extension connecter is correctly secured.** If not, electric shock, fire or abnormal operation may be caused.
- **If lots of vibration is expected in the installation environment, don't let PLC directly vibrated.** Electric shock, fire or abnormal operation may be caused.
- **Don't let any metallic foreign materials inside the product**, which may cause electric shock, fire or abnormal operation.

Safety Instructions when wiring

⚠ Warning

- **Prior to wiring, be sure that power of PLC and external power is turned off.** If not, electric shock or damage on the product may be caused.

- **Before PLC system is powered on, be sure that all the covers of the terminal are securely closed.** If not, electric shock may be caused

⚠ Caution

- **Let the wiring installed correctly after checking the voltage rated of each product and the arrangement of terminals.** If not, fire, electric shock or abnormal operation may be caused.

- **Secure the screws of terminals tightly with specified torque when wiring.** If the screws of terminals get loose, short circuit, fire or abnormal operation may be caused.

- **Surely use the ground wire of Class 3 for FG terminals, which is exclusively used for PLC**. If the terminals not grounded correctly, abnormal operation may be caused.

- **Don't let any foreign materials such as wiring waste inside the module while wiring,** which may cause fire, damage on the product or abnormal operation.

Safety Instructions for test-operation or repair

⚠ Warning

- **Don't touch the terminal when powered**. Electric shock or abnormal operation may occur.
- **Prior to cleaning or tightening the terminal screws, let all the external power off including PLC power.** If not, electric shock or abnormal operation may occur.
- **Don't let the battery recharged, disassembled, heated, short or soldered**. Heat, explosion or ignition may cause injuries or fire.

⚠ Caution

- **Don't remove PCB from the module case nor remodel the module.** Fire, electric shock or abnormal operation may occur.
- **Prior to installing or disassembling the module, let all the external power off including PLC power.** If not, electric shock or abnormal operation may occur.
- **Keep any wireless installations or cell phone at least 30cm away from PLC**. If not, abnormal operation may be caused.

Safety Instructions for waste disposal

⚠ Caution

- **Product or battery waste shall be processed as industrial waste.** The waste may discharge toxic materials or explode itself.

Revision History

Version	Data	Main contents	Revised location
V 1.0	’08. 6	First Edition	-
V 1.1	’08.7	1. Modifying contents	-
		(2) How to configure redundancy system	2-5
		(3) Performance specification	4-1,4-2
		(4) Scan Time	5-6,5-8
		(5) Program memory	5-28
		(6) I/O module skip function	6-19,6-20
		(7) Module changing wizard during RUN	6-21
		(8) Performance specification	7-1,7-3
		(9) Example of calculating consumption current/power	8-5 11-5
		(10) Caution in handling	11-13
		(11) Grounding	-
		2. Adding contents	1-3
		(1) XGR redundancy system configuration	2-13
		(2) Remote I/O system	5-8
		(3) Scan Time	6-20
		(4) I/O module skip	-
		3. Deleting contents	7-1
		(1) Max install-able module number in specification	
V 1.2	’09.9	1. Modifying contents	-
		(1) Performance specification	4-2
		(2) redundancy parameter setting window	5-2, CH6
		(3) Flag	A-6, A-11
V 1.3	’09.9	1. Adding contents	
		(1) Contents on redundancy system communication operation setting (ONE IP Solution)	6-18~20
		2. modifying contents	
		(1) Product list (add new products)	
		- XGR-DC32, XGR-DMMA	2-1
		- XGF-SOEA	2-3
		- XGL-EIPT	2-4

Version	Data	Main contents	Revised location
V 1.4	'09.12	1. Adding contents	Ch8.1, Ch8.2, Ch8.3
		(1) adding contents related to DC power	
V 1.5	'10.03	1. Adding contents	
		(1) Contents on reset/D.Clear	4-6
		(2) Contents on Cnet/FEnet module equipment	2-7
		(3) Contents on redundancy parameter	5-8~9
		(4) Warning flag	App-8
		(5) Smart Link wiring diagram and Event input module specifications	9-24~25
		2. Modifying contents	
		(1) Contents on parameter setting window	5-4, 6-1, 6-14~15
		(2) Contents on Fault mask setting	6-20
		(3) Module replacement	6-23~24
V 1.6	'10.10	1. Modifying contents	
		(1) Modifying contents	Ch3.1
		(2) Adding contents	Ch5.1.2
		(3) Adding modules	Ch5.1.4
		(4) Modifying contents on redundancy parameter	Ch5.1.4
		(5) Modifying contents on basic parameter	Ch6.7.1
V 1.7	'10.10	1. Modifying contents	
		(1) Overview	Ch1.1
		(2) System configuration	Ch2.1
		(3) Power module	Ch8.4.1
		(4) Base and expansion cable	Ch101.1
V 1.8	'10.10	1. Adding contents	
		(1) Adding contents on redundancy parameter	Ch5.1.4
		(2) Adding contents on redundancy parameter	Ch6.8.1
		(3) Adding contents on redundancy parameter	Ch6.9

Version	Data	Main contents	Revised location
V 1.9	’11.06	1. Adding contents	
		(1) Adding module on Extension redundancy	1-1, 2-1, 7-2
		(2) Adding contents on Extension redundancy	1-3, 1-4, 2-8, 6-25, 8-3, 10-2, 14-28
		(3) Adding contents on Flag	App-3/7/11/13
		(4) Adding optical single module	1-1, 2-1, 2-6, 4-1, 4-2, 7-1
V 2.0	’13.01	1. Adding contents	
		(1) Adding Redundancy Expansion Base	2-1, 10-1
		(2) Built-in PID Function	Ch 14
		2.Modifying contents	
		(1) Modifying EtherNet/IP	1-6, 2-7, 2-13
		(2) Modifying U, K Device memory	4-1, 5-32
		3. Removing contents	
		(1) Removing Appendix 1.11	App-21
V 2.1	’14.06	1. Adding contents	
		(1) Adding _REFRESH_NG_BASE	App-13
V 2.2	’15.07	1.Modifying contents	
		(1) Vibration resistance Specifications	3-1
V 2.3	‘15.09	1.Modifying contents	
		(1) Rated input voltage modified	8-1
		(2) Circuit configuration modified	9-2, 9-3, 9-4, 9-5
		(3) Smart Link Model name modified	9-6
		(4) Terminology modified (FG → PE)	8-2, 10-1, 10-2, 11-2, 13-1
		(5) CPU Processing Speed Unit changed (us → ns)	4.1
		(6) List of Configuration Products updated	2.1
V 2.4	‘16.03	1.Modifying contents (1) Smart Link manual supplemented	9-6
V2.5	’16.09	1. Adding contents (1) Redundancy expansion driver(single mode) updated	1-1, 2-1, 7-7

Version	Data	Main contents	Revised location
V 2.6	’20.05	LSIS to change its corporate name to LS ELECTRIC	Entire
V2.7	’23.06	Domain modification (www.lselectric.co.kr -> www.ls-electric.com)	
V2.8	’24.06	Warranty period changed	BackCover
V2.9	’24.12	Detail of the Micro Processor in use have been added	Ch1.3

Thank you for purchasing PLC of LS ELECTRIC Co., Ltd.
Before use, make sure to carefully read and understand the User's Manual about the functions, performances, installation and programming of the product you purchased in order for correct use and importantly, let the end user and maintenance administrator to be provided with the User's Manual.

The User's Manual describes the product. If necessary, you may refer to the following description and order accordingly. In addition, you may connect our website (http://www.ls-electric.com/) and download the information as a PDF file.

Relevant User's Manuals

Title	Description
XG5000 User's Manual (for XGK, XGB)	XG5000 software user manual describing online function such as programming, print, monitoring, debugging by using XGK, XGB CPU.
XG5000 User's Manual (for XGI, XGR)	XG5000 software user manual describing online function such as programming, print, monitoring, debugging by using XGI, XGR CPU.
XGK/XGB Instructions & Programming User's Manual	User's manual for programming to explain how to use instructions that are used PLC system with XGK, XGB CPU.
XGI/XGR/XEC Instructions & Programming User's Manual	User's manual for programming to explain how to use instructions that are used PLC system with XGI, XGR, XEC CPU.
XGK CPU User's Manual (XGK-CPUA/E/H/S/U)	XGK-CPUA/CPUE/CPUH/CPUS/CPUU user manual describing about XGK CPU module, power module, base, IO module, specification of extension cable and system configuration, EMC standard.
XGI CPU User's Manual (XGI-CPUU/CPUH/CPUS)	XGI-CPUU/CPUH/CPUS user manual describing about XGI CPU module, power module, base, IO module, specification of extension cable and system configuration, EMC standard.
XGI CPUZ User's Manual (XGI-CPUZ3/ CPUZ5/ CPUZ7)	XGI-CPUZ3/ CPUZ5/ CPUZ7 user manual describing about XGI CPU module, power module, base, IO module, specification of extension cable and system configuration, EMC standard.
XGR Redundant Series User's Manual	XGR- CPUH/F, CPUH/T user manual describing about XGR CPU module, power module, extension drive, base, IO module, specification of extension cable and system configuration, EMC standard.
XG-PM User's Manual	XG-PM software user manual describing online function such as motion programing, monitoring, debugging by using Motion Control Module.

◎ TABLE OF CONTENTS ◎

Chapter 1 Overview ..... 1-1~1-8

1.1 About this User Manual 1-1
1.2 Configuration of the XGR Redundant System 1-3
1.3 Features of the XGR Redundancy system 1-4
1.4 Glossary 1-6

Chapter 2 System Configuration ..... 2-1~2-17

2.1 Product List 2-1
2.2 Redundancy System 2-7
2.2.1 Redundant System Configuration 2-7
2.2.2 Redundancy of CPU system 2-9
2.2.3 Power Module Redundancy 2-11
2.2.4 Extension Drive Redundancy 2-12
2.2.5 Extension Base Communication Path Redundancy 2-12
2.2.6 Example of Redundant System Configuration 2-12
2.3 Network System 2-17
2.3.1 Networking among Systems 2-17
2.3.2 Remote I/O System 2-17

Chapter 3 General Specifications 3-1

3.1 General Specifications 3-1

Chapter 4 CPU Module ..... 4-1~4-8

4.1 Performance Specifications 4-1
4.2 Names and Functions of Parts 4-3
4.3 Battery 4-7
4.3.1 Battery specifications 4-7
4.3.2 Cautions for usage 4-7
4.3.3 Battery life 4-7
4.3.4 Replacement 4-8

Chapter 5 Program Constitution and Operation Method ..... 5-1~5-33

5.1 Program Basics 5-1
5.1.1 Program Structure and Execution 5-1
5.1.2 Software Program Execution Methodology 5-2
5.1.3 Operation of instantaneous interrupt 5-5

5.1.4 Scan Time 5-6
5.2 Program Execution 5-11
5.2.1 Program Type.....5-11
5.2.2 Program Execution 5-11
5.2.3 Restart Mode 5-12
5.2.4 Task Program 5-14
5.3 Operation Mode.....5-23
5.3.1 Operation Mode 5-23
5.3.2 RUN mode 5-23
5.3.3 Stop Mode 5-24
5.3.4 Debug Mode 5-25
5.3.5 Switching Operation Mode 5-25
5.4 Redundancy System Operation 5-27
5.4.1 Redundancy System Operation 5-27
5.4.2 Start-up of Redundant System.....5-29
5.5 Memory 5-31
5.5.1 Program memory.....5-31
5.5.2 Data memory 5-32
5.5.3 Data retain area setting.....5-32

Chapter 6 CPU Module Functions ..... 6-1~6-24

6.1 Self-diagnosis Function 6-1
6.1.1 Scan watchdog timer.....6-1
6.1.2 I/O Module Check Function 6-3
6.1.3 Battery level check.....6-3
6.1.4 Saving error log.....6-3
6.1.5 Troubleshooting 6-3
6.2 Clock Function 6-4
6.3 Remote Functions 6-7
6.4 Forced On/Off Function of I/O.....6-10
6.4.1 Force I/O Setting 6-10
6.4.2 The point of time of method of forced On/Off process.....6-11
6.5 Operation history saving function 6-12
6.5.1 Error history 6-12
6.5.2 Mode change history 6-12
6.5.3 Shut down history 6-12
6.5.4 System history.....6-12
6.6 External device failure diagnosis function 6-13
6.7 Redundancy system operation mode 6-14
6.7.1 Operation mode setting 6-14
6.7.2 Data synchronization area setting.....6-16
6.8 Setting operation of communication 6-17
6.8.1 Automatic master conversion 6-17
6.8.2 Global status variable 6-18
6.8.3 ONE IP Solution.....6-18
6.9 Fault Mask Function 6-20
6.9.1 Applications and operations 6-20
6.9.2 Fault mask setting.....6-20
6.9.3 Releasing fault mask 6-20
6.10 I/O Module Skip Function.....6-21

6.10.1 Applications and operations 6-21
6.10.2 Setting and processing I/O data 6-21
6.10.3 Releasing skip function 6-21
6.11 I/O Base Skip Function 6-22
6.11.1 Purpose and outline of the operation 6-22
6.11.2 Setting method 6-22
6.11.3 Releasing skip function 6-22
6.12 Module Replacement Function during Operation 6-23
6.12.1 Module replacement in redundant system 6-23
6.12.2 Replacing I/O module in redundant system 6-23
6.12.3 Replacing base module in redundant system 6-24

Chapter 7 Extension Drive Module ..... 7-1~7-3

7.1 Performance specifications 7-1
7.2 Identification and Function 7-2

Chapter 8 Power Module ..... 8-1~8-5

8.1 Type and Specification 8-1
8.2 Parts' Names 8-2
8.3 Selection 8-3
8.4 Examples of Current Consumption/Power Calculations 8-4

Chapter 9 IO Module ..... 9-1~9-40

9.1 Cautions for Selecting Modules 9-1
9.2 Digital Input Module Specifications 9-3
9.2.1 8 point DC24V input module(source/sink type) 9-3
9.2.2 16 point DC24V input module(source/sink type) 9-4
9.2.3 16 point DC24V input module(source type) 9-5
9.2.4 32 point DC24V input module(source/sink type) 9-6
9.2.5 32 point DC24V input module(source type) 9-7
9.2.6 64 point DC24V input module(source/sink type) 9-8
9.2.7 64 point DC24V input module(source type) 9-9
9.2.8 16 point AC110V input module 9-10
9.2.9 8 point AC220V input module 9-11
9.2.10 8 point AC220V isolated input module 9-12
9.3 Digital Output Module Specifications 9-13
9.3.1 8 point relay output module 9-13
9.3.2 16 point relay output module 9-14
9.3.3 16 point relay output module(Surge Killer built-in type) 9-15
9.3.4 16 point Triac output module 9-16
9.3.5 16 point transistor output module(sink type) 9-17
9.3.6 32 point transistor output module(sink type) 9-18
9.3.7 64 point transistor output module(sink type) 9-19
9.3.8 16 point transistor output module(source type) 9-20
9.3.9 32 point transistor output module(source type) 9-21
9.3.10 64 point transistor output module(source type) 9-22

9.3.11 8 point transistor isolated output module(sink type) 9-23
9.4 Digital I/O Combined Module Specifications. 9-24
9.4.1 32 point(DC input transistor output) I/O combined module 9-24
9.5 Event Input Module 9-25
9.5.1 Event input module 9-25

9.6 Applications of Smart Link 9-26
9.6.1 Modules accessible to Smart Link 9-26
9.6.2 Smart Link Components 9-26
9.6.3 Smart Link Mapping Table 9-27
9.6.4 Smart Link Connection 9-27
9.6.5 Smart Link Connection Diagram 9-28
9.6.6 Smart Link Specifications & Dimensions 9-38

Chapter 10 Base and Extension Cable ..... 10-1~10-5

10.1 Specifications 10-1
10.1.1 Basic base 10-1
10.1.2 Extension base 10-1
10.1.3 Sync. Cable 10-2

10.1.4 Extension cable 10-2
10.1.5 Connector for extension cable (electrical) 10-3
10.2 Parts and Names 10-4
10.2.1 Basic base 10-4
10.2.2 Extension base 10-5

Chapter 11 Installation and Wiring ..... 11-1~11-13

11.1 Installation 11-1
11.1.1 Installation environment 11-1
11.1.2 Cautions for handling 11-3
11.1.3 Attachment/Detachment of modules 11-8
11.2 Wiring 11-10
11.2.1 Power wiring 11-10
11.2.2 I/O Device wiring 11-11
11.2.3 Grounding wiring 11-12
11.2.4 Specifications of wiring cable 11-13

Chapter 12 Maintenance ..... 12-1~12-2

12.1 Repairs and Maintenance 12-1
12.2 Routine Inspection 12-1
12.3 Periodic Inspection 12-2

Chapter 13 EMC Compliance. ..... 13-1~13-4

13.1 Requirements Complying with EMC Specifications 13-1
13.1.1 EMC specifications 13-1
13.1.2 Panel.....13-2
13.1.3 Cable 13-3
13.2 Requirements Complying with Low Voltage Direction 13-4
13.2.1 Specifications applicable to XGT series 13-4
13.2.2 Selection of XGT series PLC 13-4

Chapter 14 Built-in PID Function .....14-1~14-37

14.1 Features 14-1
14.2 PID Control.....14-1
14.3 PID Control Operation 14-2
14.3.1 Terms used.....14-2
14.3.2 PID equation 14-2
14.3.3 P control.....14-3
14.3.4 PI control.....14-4
14.3.5 PID control.....14-5
14.4 PID Instruction.....14-6
14.4.1 PID loop state.....14-6
14.4.2 PID instruction group 14-7
14.5 PID Configuration 14-9
14.5.1 Common bit area 14-12
14.5.2 Individual data operation 14-15
14.6 Convenient Functions of PID Instruction..... 14-22
14.6.1 Various control method including PID 14-22
14.6.2 Operation and function of Anti Wind-UP 14-22
14.6.3 Operation and function of Auto-tuning..... 14-22
14.6.4 Operation and function of cascade..... 14-23
14.7 Directions of PID Instructions..... 14-24
14.7.1 Hardware configuration 14-24
14.7.2 Program example 1 14-27
14.7.3 PID control..... 14-28
14.7.4 AT(Auto-tuning) operation 14-35
14.7.5 Program example 2 14-36
14.7.6 Cascade operation 14-37

Chapter 15 Troubleshooting .....15-1~15-27

15.1 Basic Troubleshooting Procedure 15-1
15.2 Troubleshooting 15-2
15.2.1 Action when POWER LED is off.....15-3
15.2.2 Action when WAR. (Warning) LED is on.....15-4
15.2.3 Action when ERR. LED is on. 15-8
15.2.4 Action when RUN/STOP LED is off.....15-9
15.2.5 Acton when I/O module does not work properly..... 15-10
15.2.6 Action when writing program is not possible 15-12
15.2.7 Action when Sync. cable is not installed properly 15-13
15.2.8 When undesirable master switching occurs 15-14
15.2.9 When newly added CPU does not join redundant operation 15-15

15.2.10 When failing to switch master 15-16
15.2.11 When extension cable is disconnected 15-17
15.2.12 When extension driver gets error 15-19
15.3 Troubleshooting Questionnaires 15-21
15.4 Cases 15-22
15.4.1 Trouble types and measures of input circuit 15-22
15.4.2 Trouble types and measures of output circuit 15-23
15.5 Error Codes List 15-25
15.5.1 Error codes during CPU operation 15-25

Appendix 1 Flags List ..... App-1~App-18

Appendix 1.1 User Flag App-1
Appendix 1.2 System Error Representative Flag App-2
Appendix 1.3 System Error Detail Flag App-6
Appendix 1.4 System Warning Representative Flag App-8
Appendix 1.5 System Warning Detail Flag App-10
Appendix 1.6 System Operation Status Information Flag App-11
Appendix 1.7 Redundant Operation Mode Information Flag App-16
Appendix 1.8 Operation Result Information Flag App-17
Appendix 1.9 Operation mode Key Status Flag App-18
Appendix 1.10 Link Flag (L) List App-19
Appendix 1.11 Reserved Word App-21

Chapter 1. Overview

1.1 About this User Manual

This User Manual describes the performance specifications and operation procedures of the redundancy system including the XGR-CPU, in addition to the configuration of communication system and the use of special module in relation to the redundancy system.

This User Manual provides the basic specifications of the CPU module, power module, I/O module, main/expansion base of redundancy and expansion drive module, which are applied to the basic system of redundancy (XGR).

Classification	Model Name
Redundancy CPU Module	XGR–CPUH/F, XGR–CPUH/T, XGR-CPUH/S
Expansion Drive Module	XGR–DBST, XGR–DBSF(S), XGR–DBSH(S)
Redundancy Power Module	XGR–AC12, XGR-AC22, XGR-AC13, XGR-AC23, XGR-DC42
I/O Module	XGI–□□□□, XGQ–□□□□
Redundancy Basic Base	XGR-M02P, XGR-M06P
Redundancy Expansion Base	XGR-E12P, XGR-E12H
Redundancy Expansion Drive Module	XGR-DBDT, XGR-DBDF(S), XGR-DBDH(S)

For programming, see following manuals in addition to this User Manual;

- XG5000 User Manual (for XGI/XGR)
- XGI/XGR Instruction User Manual

For further information on the special and communication modules, see the manuals and technical data pertinent to each special module and communication modules.

- User Manuals of the special modules
- User Manuals of the communication modules

This User Manual contains following information.

Chapter	Subject	Description
Chap. 1	Overview	Describes the configuration, product features, and glossaries.
Chap. 2	System Configuration	Describes the product types and system configurations available for the XGR series.
Chap. 3	General Specifications	Provides the common specifications of the modules used in the XGR series.
Chap. 4	CPU Module Specifications	Describes the performance, specification, and operation of the XGR-CPUH.
Chap. 5	Configuration of program and operation method	
Chap. 6	CPU Module Functions	
Chap. 7	Expansion driver module	Describes the specifications and use of the I/O module and power module, except the CPU module.
Chap.8	Power Module	
Chap. 9	IO Module	
Chap. 10	Base ·Expansion Cable	
Chap. 11	Installation and Wiring	Provides the guidelines for installation, wiring and precaution of the PLC system to secure system reliability.
Chap. 12	Maintenance	Provides the items and methodology of maintenance for PLC system to prevent failure throughout the service life.
Chap. 13	EMC Compliance	Provides the system construction and configuration in response to the EMC specification.
Chap. 14	Troubleshooting	Describes various errors and faults which may occur in the system and countermeasures..
Append. 1	Flag List	Describes the types and contents of various flags.
Append. 2	Dimensions	Provides the external size of the CPU, I/O module and base.
Append. 3	GLOFA Compatibility	
Append. 4	Warranty	

Note

1) This User Manual does not describe the special and communication modules and programming.
Refer related manuals for the information.

2) XGR CPU is a kind of XGT PLC system whose CPU type can be classified as follows;
① XGK Series: the XGT PLC systems having the CPU using Master-K language(LS language)
② XGI Series: the XGT PLC systems having single CPU using IEC language
③ XGR Series: the XGT PLC systems having redundant CPUs using IEC language

1.2 Configuration of the XGR Redundant System

XGR Redundancy System provides reliable solution for various types of redundancy systems required in diversified applications. The XGR Redundancy System is economical and user-convenient because the system makes use of the most resources of the XGI system, added with the components for redundancy.

Redundancy

- ✓ CPU module redundancy
- ✓ Power module redundancy
- ✓ Ethernet communication module redundancy

Modules for redundancy

- ✓ 2 redundant CPUs [optical, electrical]
- ✓ 5 types of power module [standard, large output] – AC110V, AC220V, DC24V individual
- ✓ Redundant bases [2, 6 slots: 2, 6 communication modules can be installed]
- ✓ 3 types of expansion drive modules [per media class: optical, electrical, mixed]
- ✓ Expansion base [12 slots: according to consumption current]
- ✓ 3 types of redundancy expansion drive modules [per media: Optical, electrical, mixed]
- ✓ Redundancy expansion base [12 slots: according to consumption current]

CPU Module

- ✓ IEC 61131-3 language supported, ladder process rate of 42ns/command, 3MB (Approx. 128kstep) program capacity, 131,072 of I/O points
- ✓ 1Gbps optical communication for CPU synchronization
- ✓ Built-in I/O communication master
- ✓ Provides 2 types of CPU module according to the I/O communication media [optical, electrical]

Redundant system Network

- ✓ Expansion drive module
- ✓ Topology: ring [bus type operation activated in case of one error]
- ✓ Provides optical, electrical, and combined media
- ✓ Applied with 100Mbps class industrial Ethernet technology
- ✓ Max. available I/O points: 23,808 (31 stations x 12 slots x 64 points)

Programming Tool

- ✓ Integrated control of all the all XGT types with XG5000 – XGK, XGI, XGB, XGR
- ✓ Convenient programming, various motoring function, diagnosis function, edit funtion
- ✓ Supports various IEC type languages: LD, ST, SFC, IL[Only view function]
- ✓ Supports communication parameter setting, frame monitoring function through XG-PD
- ✓ Supported with software packages per functionalities for motion, APM, temperature controller, etc.

1.3 Features of the XGR Redundancy system

XGR Redundancy System provides optimized solutions in various applications with its superb performance and convenience features.

High performance

- ✓ CPU process rate: 42ns / command
- ✓ High speed backplane
- ✓ Use 32Bit Micro Processor
- ✓ Large capacity control points: max. 131,072 points
- ✓ Sufficient program capacity (max. 128ksteps)
- ✓ Sufficient data memory: 25MB
- ✓ Long data type (64bit) and high speed real number operation (single, double) provided
- ✓ Switching operation with minimum delay : if the master CPU fails, operation is switched to the backup CPU within 50ms

Minimum size implemented

- ✓ Compact panel can be implemented with the minimum size among the class
- ✓ CPU module: Width(55 mm) * Height(98 mm) * Depth(90 mm)
- ✓ Power module
  1) XGR-AC12/AC22: Width (55 mm) * Height (98 mm) * Depth (90 mm)
  2) XGR-AC13/AC23: Width (55 mm) * Height (98 mm) * Depth (110 mm)

Easy expansion using network

- ✓ Easy installation of expansion bases using network cable
- ✓ Up to 31 remote bases can be added
- ✓ Software program can be uploaded/downloaded via online access from expansion base
- ✓ Communication master module on expansion base enables the installation of smart I/O at anywhere

Improved maintenance maintain ace by system history, network ring configuration, etc.

- ✓ Provides system analysis data including the operation, error, and system histories
- ✓ Network ring configuration enables normal system operation even when a network cable fails
- ✓ Provides network monitoring and protocol monitoring functions
- ✓ If communication fails (smart I/O, etc.), the failed channel can be monitored (by monitoring the flag via HMI).
- ✓ Graphic display of system configuration
- ✓ Module Changing Wizard enables safe replacement of module during operation
- ✓ Base Changing Wizard enables safe replacement of base during operation

IEC 61131-3 (standard language) specification compliance

- ✓ Provides IEC standard LD, ST, SFC, IL(only view function)
- ✓ Provides IEC standard program structure and data type

Supports various communication functions

- ✓ Open network enables convenient interface with other products (Ethernet, Profibus, DeviceNet, RS-232C, RS-422/485, etc.)
- ✓ Supports various protocols for improved convenience
- ✓ Up to 24 communication master modules (12 high speed links, 8 P2Ps) can be mounted on one redundant system.
- ✓ Simple and east network diagnosis using network and communication frame monitoring function
- ✓ RAPIEnet module can be inserted on basic base

Diverse I/O modules are provided for easy system configuration

- ✓ 8, 16, 32, and 64 point modules are provided (8/16 point modules for relay output)
- ✓ Single input, single output, mixed I/O module provided

Extended applications with enhanced analog function

- ✓ Analog modules can be connected to the slots of all the expansion bases (max. 250 output modules, 139 input modules)
- ✓ Supports various applications with insulated type analog and temperature module
- ✓ Convenient use by special parameter settings and flags
- ✓ Strengthened debugging function by monitoring flags and data and changing the setting value through special monitor display window

Provides integrated programming & engineering environments

- ✓ Integrated control of all the all XGT types with XG5000 – XGK, XGI, XGB, XGR
- ✓ Convenient programming, various motoring function, diagnosis function, edit funtion
- ✓ Supports various IEC type languages: LD, ST, SFC, IL[Only view function]
- ✓ Supports communication parameter setting, frame monitoring function through XG-PD
- ✓ Supported with software packages per functionalities for motion, APM, temperature controller, etc.

Provides diversified additional function

- ✓ Battery backup and flash memory backup for software programs
- ✓ Various restart mode(warm, cold)
- ✓ Task program process
- ✓ Forced ON/OFF of I/O
- ✓ Clock
- ✓ Module changing wizard available during operation
- ✓ Fault mask function
- ✓ Module skip function
- ✓ Extensive operation history supported (system history)
- ✓ Detail error report supported (error history)
- ✓ LED indication of operation status
- ✓ Dot matrix indicator: display operation information and abnormal matters in texts.

PID Function

- ✓ Max. 256 loops supported
- ✓ Parameter setting using XG5000, convenient monitoring on loop status through Trend monitor
- ✓ Easy control parameter setting using improved auto-tuning function
- ✓ Provides various control modes including normal/reverse combination operation, 2 step SV PID control, cascade control, etc.
- ✓ Safety secured by diversified alarm functions including PV MAX, PV change, etc.

1.4 Glossary

This section provides the major terms and their definitions, used in this Manual.

Terms	Definition	Remark
Module	A standardized component having a specific function to constitute a system. E.g., I/O board designed to be inserted into base.	CPU module, power module, I/O module, etc.
Master CPU Module	The CPU module running the present software program. Automatically switched to backup CPU module when the operation is stopped and transfers the control	
Standby CPU Module	The control function of the master CPU module is transferred to this standby CPU module in case of failure, and this standby CPU module becomes the master CPU module.	
Redundant Basic Base	This base can accommodate the CPU module and Ethernet communication module. ▪Master CPU system: the redundant basic system whose CPU module is operating as the master. ▪Standby CPU system: the redundant basic base whose CPU module is operating as backup mode.	
Redundant Expansion Base	Expansion base where power module, I/O module, and special/communication module can be installed. (The communication module can be any module except the EtherNet/IP, FEnet and RAPIEnet).	
Expansion Drive Module	The module for communication between bases. It also enables setting the base numbers (1~31) with a rotary switch	
Synchronous cable	1Gbps optical cable for connection between the CPU modules of a redundant system	
CPU redundancy	As a part of redundant system, the system is constructed to enable continuous operation when the master CPU module fails using a backup CPU module	
Power redundancy	A system constructed with redundant power modules to enable continuous system operation when a module of the base fails	
Unit	A module or a set of module which is the minimum unit of a PLC system operation. A PLC system comprises units and/or sets of units	Basic unit. Expansion unit
PLC System	A system consists of PLC and peripheral devices and can be controlled with user software program	
XG5000	A programming tool for developing software program, editing and debugging	
Module Changing Wizard	A software used for the replacement of CPU module during PLC operation. Power module, I/O module, some of the special modules, and base module can be replaced with this software	Replaceable special modules: A/D,D/A, HSC,RTD

Terms	Definition	Remark
Cold Restart	Starting a PLC system and user program after initializing all data (variables and programs such as I/O image area, internal register, timer, counter, etc.) automatically or manually	
Warm Restart	Along with the function that notifies user-program about power OFF incidents, the user programs are restarted with holding previous data according to setting, after a power OFF.	
I/O Image Area	The internal memory area of the CPU module installed to maintain I/O status	
Cnet	Computer Network	
FEnet	Fast Ethernet Network	
Pnet	Profibus-DP Network	
Dnet	DeviceNet Network	
Rnet	Remote Network	
RTC	Real Time Clock. The generic IC with a built-in clock function	
Watchdog Timer	The timer which monitors the preset running time of a user program, and triggers alarm if the process fails to be completed within preset time	
Function	The operation units which do not store the operation result in the instructions, such as the 4 arithmetical and comparison operations, and output the results of the inputs immediately	
Function Block	The operation units which store the operation results in the instruction, such as timer and counter, and use the results over multiple scans	
Direct Variable	The variables used without declaring name and type. For example, I, Q, and M areas are direct variables.	%IX0.0.2 %QW1.2.1 %MD1234, etc.
Automatic Symbolic Variable	The variables used with names and type declared by user. - if declared as'INPUT_0'=%IX0.0.2, 'RESULT'=%MD1234, 'INPUT_0' and 'RESULT' names can be used in the program instead of %IX0.0.2 and %MD1234.	
Task	The condition for a program start-up, such as fixed cycle task, internal contact point task, and initialization task	

Terms	Definition	Remark
Sink Input	The method wherein the current enters PLC input terminal from switch when the input signal is turned ON 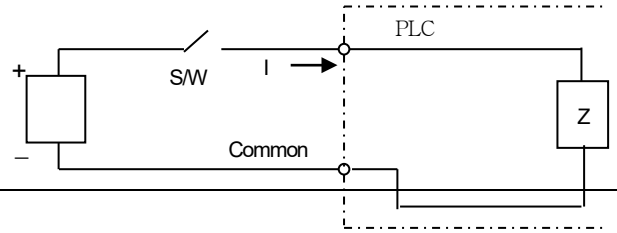	Z: input impedance
Source Input	The method wherein the current enters switch from PLC input terminal when the input signal is turned ON 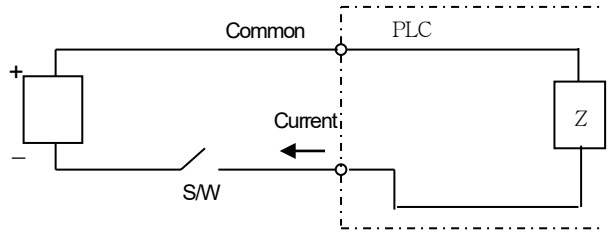	
Sink Output	The method wherein the current enters output terminal from load when the PLC output is ON 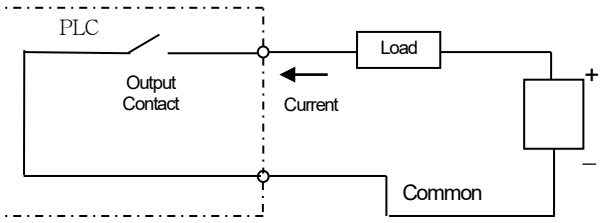	
Source Output	The method wherein the current enters from output terminal when the PLC output is ON 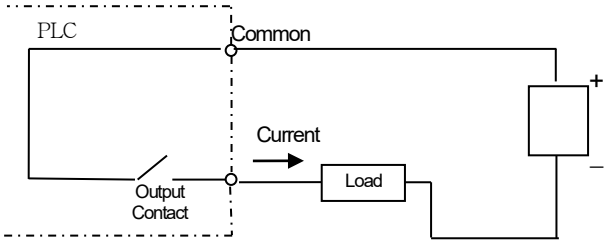	

Chapter 2. System Configuration

The XGR Series offer various products for basic systems, computer communication and network systems.
This Chapter describes the configuration method and features of each system.

2.1 Product List

The product line of the XGR Series is as follows.

(1) Products exclusive for redundancy

Product	Model	Description
Redundancy CPU Module	XGR-CPUH/F	• Max. I/O points: 23,808, program capacity: 3MByte (including UPLOAD) • For optical communication (multi mode, max. distance: 2km)
	XGR-CPUH/S	• Max. I/O points: 23,808, program capacity: 3MByte (including UPLOAD) • For optical communication (single mode, max. distance: 15km)
	XGR-CPUH/T	• Max. I/O points: 23,808, program capacity: 3MByte (including UPLOAD) • For electrical communication
Redundancy Basic Base	XGR-M02P	• For mounting redundancy CPU module, power redundancy • Available for 2 communication modules
	XGR-M06P	• For mounting redundancy CPU module, power redundancy • Available for 6 communication modules
Redundancy Expansion Base	XGR-E12P	• For mounting I/O module, power redundancy • Available for 12 I/O modules
	XGR-E08P	• For mounting I/O module, power redundancy • Available for 8 I/O modules
Redundancy Expansion Driver Base	XGR-E12H	• For mounting I/O module, power redundancy • Extension drive module redundancy • Available for 12 I/O modules
Expansion Drive Module	XGR-DBST	• Communication module for XGR expansion base operation. Electrical media
	XGR-DBSF	• Communication module for XGR expansion base operation. Optical media (multi mode, max. distance: 2km)
	XGR-DBSH	• Communication module for XGR expansion base operation. Electrical/optical media mixing (multi mode, max. distance: 2km)
	XGR-DBSFS	• Communication module for XGR expansion base operation. Optical media (single mode, max. distance: 15km)
	XGR-DBSHS	• Communication module for XGR expansion base operation. Electrical/optical media mixing (single mode, max. distance: 15km)
Expansion Drive Redundancy Module	XGR-DBDT	• Communication module for XGR expansion drive redundancy base operation. Electrical media
	XGR-DBDF	• Communication module for XGR expansion drive redundancy base operation. Optical media (multi mode, max. distance: 2km)
	XGR-DBDH	• Communication module for XGR expansion drive redundancy base operation. Electrical/optical media mixing (multi mode, max. distance: 2km)
	XGR-DBDFS	• Communication module for XGR expansion drive redundancy base operation. Optical media (single mode, max. distance: 15km)
	XGR-DBDHS	• Communication module for XGR expansion drive redundancy base operation. Electrical/optical media mixing (single mode, max. distance: 15km)

Product	Model	Description
Power Module	XGR-AC12	• DC5V: 5.5A, AC110V input
	XGR-AC22	• DC5V: 5.5A, AC220V input
	XGR-AC13	• DC5V: 8.5A, AC110V input
	XGR-AC23	• DC5V: 8.5A, AC220V input
	XGR-DC42	• DC5V: 7.5A, DC24V input
Sync. Cable	XGC-F201 XGC-F301 XGC-F501	• LC type optical cable (multi core), length: 2 m • LC type optical cable (multi core), length: 3 m • LC type optical cable (multi core), length: 5 m
Dustproof module	XGR-DMMA	• dustproof module for not used power module slot

(2) Common Products for XGT Series

(a) Digital I/O Module

Product	Model	Description
Digital Input Module	XGI-D21A	• DC 24V input, 8 points (current source / sink input)
	XGI-D21D	• DC 24V Diagnostic Input, 8 point (Current sink input)
	XGI-D22A	• DC 24V input, 16 points (current source / sink input)
	XGI-D24A	• DC 24V input, 32 points (current source / sink input)
	XGI-D28A	• DC 24V input, 64 points (current source / sink input)
	XGI-D22B	• DC 24V input, 16 points (current source input)
	XGI-D24B	• DC 24V input, 32 points (current source input)
	XGI-D28B	• DC 24V input, 64 points (current source input)
	XGI-A12A	• AC 110V input, 16 points
	XGI-A21A	• AC 220V input, 8 points
	XGI-A21C	• AC 220V isolated input, 8 points
Digital Output Module	XGQ-RY1A	• Relay output, 8 points (2A, single COM.)
	XGQ-RY1D	• Diagnostic Relay output, 8 point (for 2A, single COM.)
	XGQ-RY2A	• Relay output, 16 points (2A)
	XGQ-RY2B	• Relay output, 16 points (2A), Varistor incorporated.
	XGQ-TR2A	• Transistor output, 16 points (0.5A, sink output)
	XGQ-TR4A	• Transistor output, 32 points (0.1A, sink output)
	XGQ-TR8A	• Transistor output, 64 points (0.1A, sink output)
	XGQ-TR2B	• Transistor output 16 points (0.5A, source output)
	XGQ-TR4B	• Transistor output 32 points (0.1A, source output)
	XGQ-TR8B	• Transistor output 64 points (0.1A, source output)
	XGQ-SS2A	• Triac output, 16 points (1A)
	XGQ-TR1C	• Transistor isolated output, 8 points (2A)
Digital I/O Mixed Module	XGH-DT4A	• DC 24V input, 16 points(current source / sink input) • Transistor output, 16 points (0.1A, sink output)
Anti-vibration Module	XGT-DMMA	• Anti-vibration module for unused slots

(b) Process and Motion Control Modules

Product	Model	Description	Remarks
Analog input Module	XGF-AV8A	• Voltage Input: 8 channel • DC 1 ~ 5V / 0 ~ 5V / 0 ~ 10V / –10 ~ +10V	-
	XGF-AC8A	• Current Input: 8 channel • DC 4 ~ 20mA / 0 ~ 20mA	-
	XGF-AD08A	• Voltage/Current Input: 8 channels	-
	XGF-AD4S	• Voltage/Current Input: 4 channels • Insulation between channels	-
	XGF-AD16A	• Voltage/Current Input: 16 channels	-
	XGF-AW4S	• 2-wire voltage/current input: 4 –channel, insulation between channels • 2-wire transmitter driver power supported	-
Analog output Module	XGF-DV4A	• Voltage Output: 4 channels • DC 1 ~ 5V / 0 ~ 5V / 0 ~ 10V / –10 ~ +10V	-
	XGF-DC4A	• Current Output:: 4 channels • DC 4 ~ 20mA / 0 ~ 20mA	-
	XGF-DV4S	• Current Output:: 4 channels • Insulation between channels	-
	XGF-DC4S	• Current Output:: 4 channels • Insulation between channels	-
	XGF-DV8A	• Voltage Output: 8 channels • DC 1 ~ 5V / 0 ~ 5V / 0 ~ 10V / –10 ~ +10V	-
	XGF-DC8A	• Current Output:: 8 channels • DC 4 ~ 20mA / 0 ~ 20mA	-
Analog I/O Module	XGF-AH6A	• Voltage/Current input 4 channels • Voltage/Current output 2 channels	-
HART I/F Analog Input Module	XGF-AC4H	• Current Input : 4 channel • HART I/F, DC 4 ~ 20mA	-
HART I/F Analog Output Module	XGF-DC4H	• Current Output : 4 channel • HART I/F, DC 4 ~ 20mA	-
Thermocouple Input Module	XGF-TC4S	• Temperature (T/C) Input, 4 channels, • Insulation between channels	-
RTD Input Module	XGF-RD4A	• Temperature (RTD) Input, 4 channels	-
	XGF-RD4S	• Temperature (RTD) Input, 4 channels • Insulation between channels	-
	XGF-RD8A	• Temperature (RTD) Input, 8 channels	-
Temp. control Module	XGF-TC4UD	• Control loop : 4 loops • Input(4 channels, TC/RTD/voltage/current), Output(8 channels, TR/current)	-
	XGF-TC4RT	• Control loop: 4 loops • input (4 channels, RTD), Output (8 channels, TR)	-
High speed Counter Module	XGF-HO2A	• Voltage Input type (Open Collector type) • 200kHz, 2 channel	-
	XGF-HD2A	• Differential Input type (Line Driver type) • 500kHz, 2 channel	-
	XGF-HO8A	• Voltage Input type (Open Collector type) • 200kHz, 8 channel	-

Product	Model	Description	Remarks
Positioning Module	XGF-PO3A	• Pulse output (Open Collector type), 3 axes	-
	XGF-PO2A	• Pulse output (Open Collector type), 2 axes	-
	XGF-PO1A	• Pulse output (Open Collector type), 1 axis	-
	XGF-PD3A	• Pulse output (Line Drive type), 3 axes	-
	XGF-PD2A	• Pulse output (Line Drive type), 2 axes	-
	XGF-PD1A	• Pulse output (Line Drive type), 1 axis	-
	XGF-PO4H	• Pulse output (Open Collector type), 4 axes	-
	XGF-PO3H	• Pulse output (Open Collector type), 3 axes	-
	XGF-PO2H	• Pulse output (Open Collector type), 2 axes	-
	XGF-PO1H	• Pulse output (Open Collector type), 1 axes	-
	XGF-PD4H	• Pulse output (Line Drive type), 4 axes	-
	XGF-PD3H	• Pulse output (Line Drive type), 3 axes	-
	XGF-PD2H	• Pulse output (Line Drive type), 2 axes	-
	XGF-PD1H	• Pulse output (Line Drive type), 1 axes	-
	XGF-PN8A	• Network type(EtherCat), 8 axes, LS dedicated type	-
	XGF-PN8B	• Network type(EtherCat), 8 axes, Standard type	-
Motion Control Module	XGF-M16M	• Motion dedicated net (M-II) type, 16 axes	-
	XGF-M32E	• Motion dedicated net (EtherCAT) type, 32 axes	-
Event Input Module	XGF-SOEA	• DC 24V input, 32 point, Sequence of Event module	-
Data Log Module	XGF-DL16A	• USB 2.0, CF2001, Max 16GB • 32 points (Input: 22 points , Output : 10 points)	-

Note

Recommendations of selecting USB Cable (To avoid disconnection with XG5000)

1. Recommend that the company's USB Cable(USB-301A) which is shielded and shorter than 3m.
2. Recommend using USB Hub when connecting up to the PC poor at Noise.

(c) Communication Modules

Product	Model	Description	Remarks
FEnet Module (Optical/Elec.)	XGL-EFMF	• Fast Ethernet(optical), Master • 100/10 Mbps support	-
	XGL-EFMT	• Fast Ethernet(electrical), Master • 100/10 Mbps support	-
	XGL-ESHF	• Fast Ethernet Switch module(optical)	-
	XGL-EH5T	• Fast Ethernet Switch module(electrical)	-
RAPIEnet	XGL-EIMT	• Communication Module between PLCs (electrical) • 100 Mbps Industrial Ethernet supported	-
	XGL-EIMF	• Communication Module between PLCs (optical) • 100 Mbps Industrial Ethernet supported	-
	XGL-EIMH	• Communication Module between PLCs (electrical / optical) • 100 Mbps Industrial Ethernet supported	-
	XGL-ES4T	• Communication Module between PLCs (electrical) • 100 Mbps Industrial Ethernet supported • RAPIEnet Switch	-
Cnet Module	XGL-C22A	• Serial communication • RS-232C, 2 channel	-
	XGL-C42A	• Serial communication • RS-422(485), 2 channel	
	XGL-CH2A	• Serial communication • RS-232C 1 channel / RS-422(485) 1 channel	
FDEnet Module(Master)	XGL-EDMF	• Dedicated Ethernet(optical), Master • Deterministic communication support • 100/10 Mbps support	-
	XGL-EDMT	• Dedicated Ethernet(electrical), Master • Deterministic communication support • 100/10 Mbps support	
Rnet Module	XGL-RMEA	• for Rnet Master I/F (Smart I/O communication available) • Fast response speed support(against the existing Fnet module) • 1 Mbps base band • for twisted cable	-
Profibus-DP Module	XGL-PMEA XGL-PMEC	• Profibus-DP Master module	-
Pnet Slave I/F module	XGL-PSEA	• Profibus-DP Slave module	-
DeviceNet Module	XGL-DMEA	• DeviceNet Master module	-
Ethernet/IP Module	XGL-EIPT	□ EtherNet/IP(electric) □ 100/10 Mbps support	-
BACnet/IP I/F Module	XGL-BIPT	□ BACNet/IP(electric) □ 100/10 Mbps support	-
Fnet I/F module	XGL-FMEA	□ Field Bus master module	-

Note

For the active coupler, optical converter, repeater and block type remote module, see the network related technical documents.

2.2 Redundancy System

2.2.1 Redundant System Configuration

The configuration of the basic system incorporating the redundant basic base and expansion bases connected with cables are shown below.

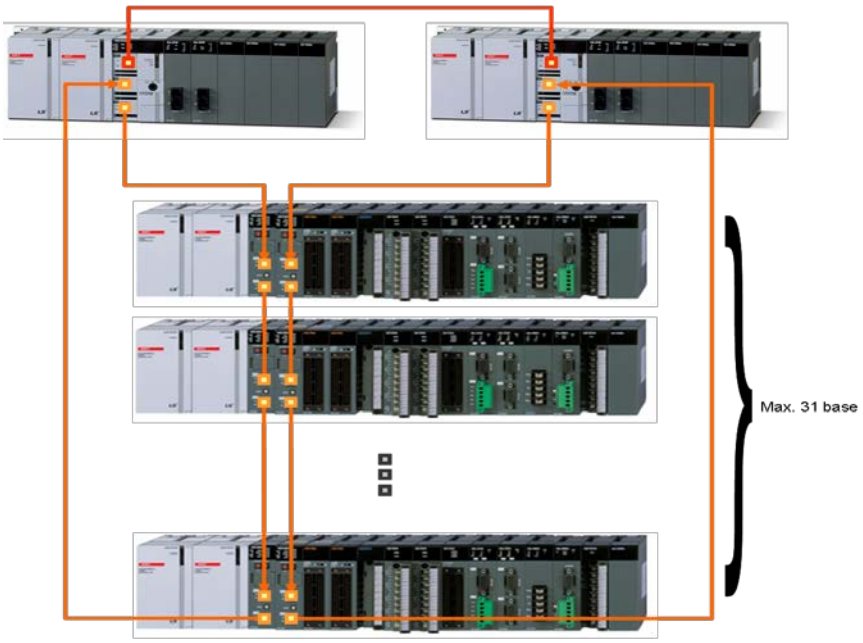

Classification	Description
Basic base configuration	• Constructed with 2 basic bases of the same structure.
Extension base configuration	• Constructed with 2 extension drive module of the same station number
Max. extendable stacks	• Expansion bases can be installed up to 31 stacks.
Max. I/O modules	• Up to 372 I/O modules can be installed in expansion bases.
Max. I/O points	• 16-point modules: 5,952 points • 32-point modules: 11,904 points • 64-point modules: 23,808 points
Max. expansion distance	• Between bases - Optical multi mode: 2 km - Optical single mode: 15km - Electrical: 100 m • Total max length - Optical multi mode: 62km (when installing 31 expansion modules) - Optical single mode: 465km (when installing 31 expansion modules) - Electrical: 3.1km (when installing 31 expansion modules)

Classification	Description
I/O number allocation for expansion bases	• The beginning value of the I/O numbers of each base is determined by the base number setup in the expansion drive module. • In the base, the I/O numbers are allocated by 64 (fixed) points per slot. Each slot is allocated with 64 points regardless of the installation and type of module. • Different from the digital I/O modules, special modules do not use I/O number for control. They use U device and exclusive function block. • An exemplary allocation of I/O numbers of a 12 slot base is shown below. 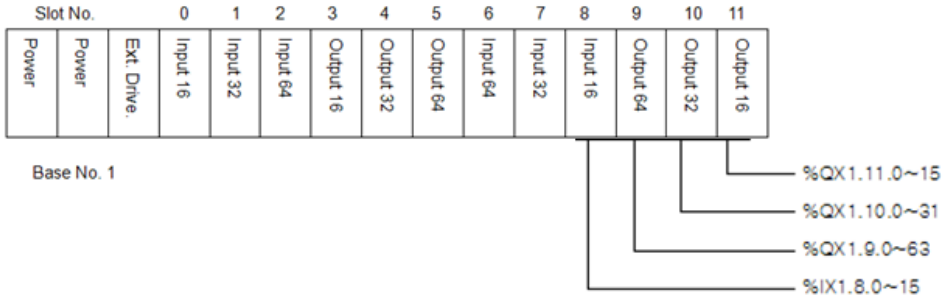
I/O number of basic base	• Since communication module only can be installed on the basic base, I/O numbering is meaningless. • Though the basic base does not use the I/O number, the same numbers (768 points) as that of a 12 lot expansion base are allocated. • The basic base has the base No. of “0” located at the first digit of the I/O No.

Note

(1)The redundant basic base has a fixed base No. of 0. Expansion bases are provided with switches for setting up base No.
(2) The base modules installed with redundant CPU are available for the basic base only.
(3) The redundant CPU is a CPU module which occupies 2 slots.
(4) The type of module setup with I/O parameter must agree with that of the actual module to enable operation to start.
(5) In the XGR system, the extension network cable (between main base and extension base, between extension base and extension base) and the sync cable (optical) between the CPU modules must use a single cable. If you use hubs, switches, opto-electric converters, etc. in the XGR system, the system may malfunction.

2.2.2 Module selection when configuring basic system

When configuring basic system, you must consider about size of each module's Data Refresh area.

Data Refresh area is used for data transmission between CPU and modules in XGR CPU system. Data Refresh area is allocated to CPU memory, irrespective of module's operation. You must consider about maximum size of Data

Refresh area. If it exceeds 5120 words(Input Data), 3072 words(Output Data), system doesn't operate properly.

(1) Size of each module's Data Refresh area

(Unit : WORD)

Item	Type	Refresh Size	Item	Type	Refresh Size
Digital input module	XGI-A12A	1	Digital output module	XGQ-RY1A	1
	XGI-A21A	1		XGQ-RY2A	1
	XGI-A21C	1		XGQ-RY2B	1
	XGI-D21A	1		XGQ-SS2A	1
	XGI-D22A/B	1		XGQ-TR1C	1
	XGI-D24A/B	2		XGQ-TR2A/B	2
	XGI-D28A/B	4		XGQ-TR4A/B	4
Digital I/O module	XGH-DT4A	2		XGQ-TR8A/B	8
Analog input module	XGF-AC8A	22	Temperature detector input module	XGF-RD4A	30
	XGF-AV8A	22		XGF-RD4S	30
	XGF-AD8A	22		XGF-TC4S	30
	XGF-AD16A	21		XGF-RD8A	23
	XGF-AD4S	12	Temperature control module	XGF-TC4RT	31
	XGF-AW4S	12		XGF-TC4UD	31
	XGF-AC4H	11	High speed counter module	XGF-HO2A	25
Analog output module	XGF-DC8A	11		XGF-HD2A	25
	XGF-DV8A	11		XGF-HO8A	25
	XGF-DC4A	11	SOE module	XGF-SOEA	2
	XGF-DV4A	11	Data log module	XGF-DL16A	32
	XGF-DC4S	11	Communication module	XGL-EFMT	16
	XGF-DV4S	11		XGL-EFMF	16
	XGF-DC4H	7		XGL-ESHF	16
Analog I/O module	XGF-AH6A	11		XGL-DMEA	16
APM module (Advanced Position module)	XGF-PO1A	2		XGL-PSEA	16
	XGF-PO2A	2		XGL-PMEA	16
	XGF-PO3A	2		XGL-PMEC	16
	XGF-PD1A	2		XGL-EDMT	16
	XGF-PD2A	2		XGL-EDMF	16
	XGF-PD3A	2		XGL-EDST	16
	XGF-PO1H	2		XGL-EDSF	16
	XGF-PO2H	2		XGL-RMEA	16

Item	Type	Refresh Size	Item	Type	Refresh Size
APM module (Advanced Position module)	XGF-PO3H	2	Communication module	XGL-FMEA	16
	XGF-PO4H	2		XGL-C22A	16
	XGF-PD1H	2		XGL-C42A	16
	XGF-PD2H	2		XGL-CH2A	16
	XGF-PD3H	2		XGL-EIMT	16
	XGF-PD4H	2		XGL-EIMH	16
	XGF-PN8A	3		XGL-EIMF	16
	XGF-PN8B	3		XGL-ES4T	16
	XGF-M16M	1		XGL-BBM	16
	XGF-M32E	4		XGL-EIPT	16

(2) Calculation of Data Refresh area's size

1) Limit of Data Refresh area's size

Sum of Data Refresh area's size installed in system (Input module) ≤ **5,120 WORD**

Sum of Data Refresh area's size installed in system (Output module) ≤ **3,072 WORD**

2) Example

In a system, below modules are installed. (Input module)

XGI-D28A(20 EA), XGF-DC8A(40EA), XGF-AC8A(20EA), XGF-RD4A(10EA)

→ Input module data refresh : (4 * 20) + (22 * 20) + (30 * 10) = 820 WORD ≤ **5,120 WORD**

→ Output module data refresh : (11 * 40) = 440 WORD ≤ **3,072 WORD**

Note

1) Sum of Input module Data Refresh area's size must not exceed 5,120 WORD.
Sum of Output module Data Refresh area's size must not exceed 3,072 WORD.

2) If size of Data Refresh area exceeds the range, XGK/I system doesn't operate properly.

2.2.3 Redundancy of CPU system

A redundant system has the redundancy of power supply modules, CPU modules, basic base modules, and communication modules. On the basic base module of a redundant system, two identical power, CPU, and communication modules are installed. The two CPU modules are connected with a sink cable.

One of the two CPU systems functions as the master which is in charge of the operation and the other is the backup system which takes over the operation when the master system fails.

After correcting the failure, the previous master system can participate in the redundant operation as a backup system. Master and backup systems can be selected using software tool and key switch during redundant operation.

Use the switch on the CPU module to setup CPU-A and CPU-B. If the setting is duplicated with A or B, normal redundant operation cannot be achieved.

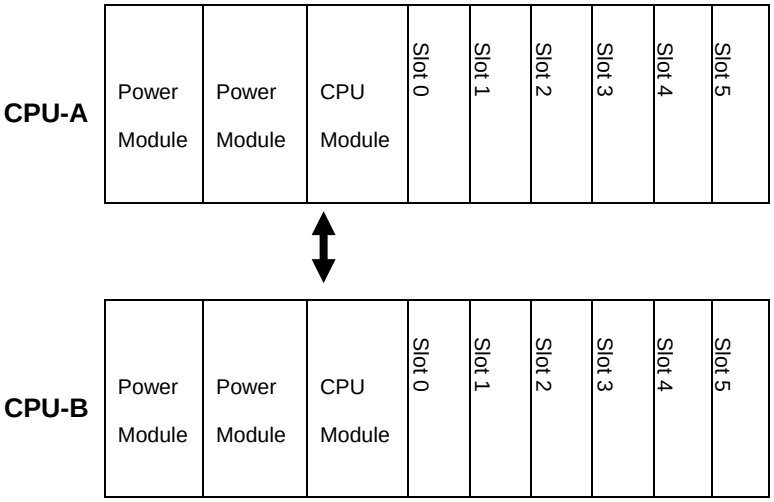

[Fig. 2.3.2] Slot configuration of duplicated basic base

The modules which can be installed on the basic base are as follows.

Modules		Type/Model
Main base	CPU Module	XGR-CPUH/T, XGR-CPUH/F
	Power Module	XGR-AC12, XGR-AC22, XGR-AC13, XGR-AC23
	Communication Module	EtherNet/IP I/F module, FEnet I/F module, RAPIEnet I/F module, Cnet I/F module*1)
	Base	XGR-M02P*2), XGR-M06P
Expansion base	Digital I/O	All types of digital I/O
	Analog I/O	All types of analog I/O
	Communication Module	Pnet/Rnet/Dnet/Cnet I/F module
*1) XGR CPU module V1.8 or above is needed. *1) XGR-M02P base is supported at XG5000 V3.6 or above		

Note

(1) Redundant CPU cannot be installed on an expansion base module.
(2) The O/S version of the two CPUs must be the same.
(3) As shown in [Fig. 2.3.2], the modules on CPU-A: 0, 1, 2, 3, 4, 5 slots and CPU-B: 0, 1, 2, 3, 4, 5 slots must be of the same product type. If the CPU-A: 0 slot is installed with an XGL-EFMF(FEnet) module, the same module must be installed on the CPU-B: 0 slot.

2.2.4 Power Module Redundancy

The power modules of the basic and expansion base systems can have a redundancy.

The redundant power module enables continuous system operation without interruption when one of the two power modules fails to supply power.

Power system or power module failure can be repaired or the module can be replaced during operation without interruption.

2.2.5 Extension Drive Redundancy

Extension redundancy system consists of power module, extension drive module, redundancy extension base, redundancy cable. All modules except extension base modules are backed up by redundancy. One extension driver operates as master system and another operation as standby which gets the right when error occurs at master system. Master extension driver recovered from error gets stand-by and doesn't participate in an operation. When changing extension drive module during RUN mode, use "Base Skip".

Extension redundancy drive modules in the same extension base should have same station number. Extension redundancy drive module has to be mounted on the designated position of extension base

Master-standby status of extension driver is determined by operating status of CPU.

2.2.6 Expansion Base Communication Path Redundancy

Since the cable connection of the expansion bases are ring-structured, the system can be operated without interruption even when a cable fails, by using the other cable.

In normal ring operation mode, operation is performed using the path which is nearer to the master. When a cable fails, the system operation is maintained by line operation mode.

The failed cable can be replaced without interrupting the operation.

(1) Ring Operation Mode

Dual ring method

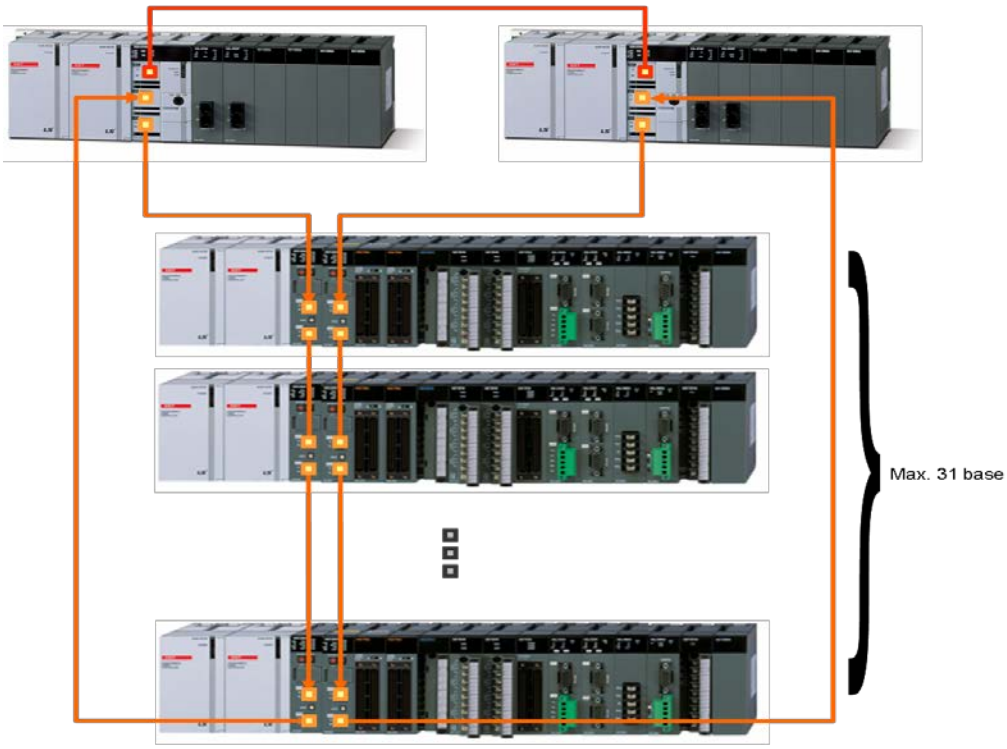

Note

(1) Extension base system can be configured by dual ring method.
(2) Diverse configuration is available but there is some limit. Refer to application note.
(3) O/S version of both extension drivers should be same.
(4) Switching of extension driver is same as that of CPU.
(5) If there is error in extension base modules (digital/analog I/O, communication module in extension base), those are not backed up by redundancy.
(6) You can use only one extension driver. But at this time, extension driver is not backed up by redundancy.
(7) All extension drivers in the system need not be same.

2.2.7 Example of Redundant System Configuration

(1) Example of using electrical modules

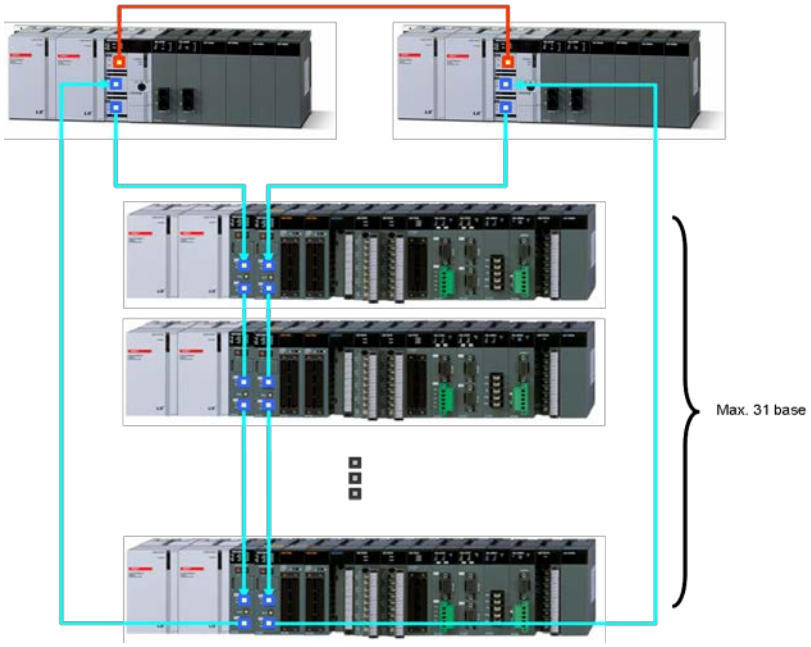

(a) CPU-A module, CPU-B module: XGR-CPUH/T
(b) Ext. drive modules of base 1,2,3: XGR-DBDT

(2) Example of using optical modules

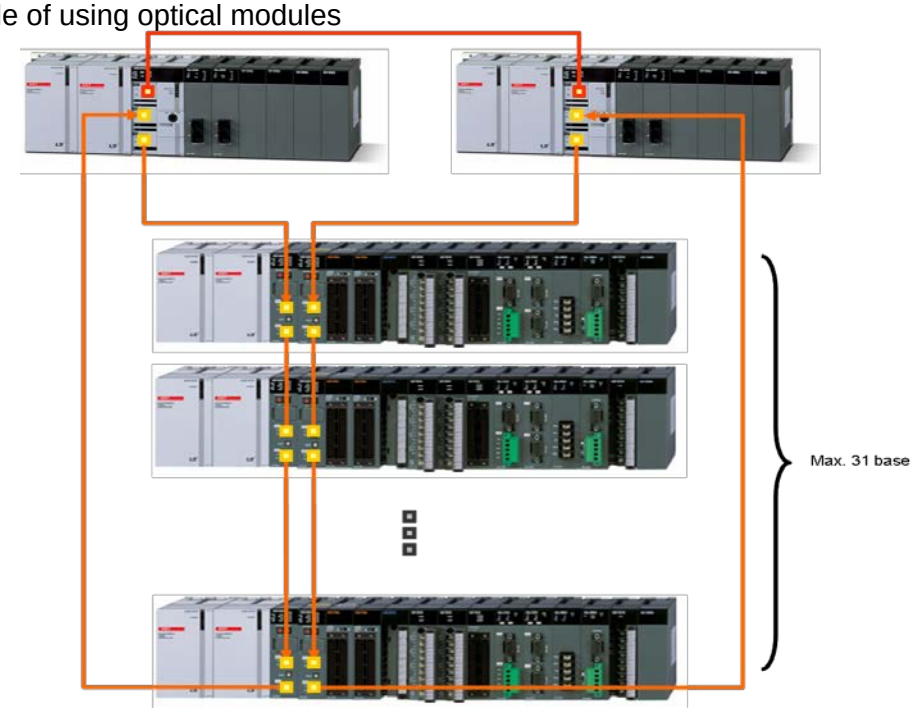

(a) CPU-A module, CPU-B module: XGR-CPUH/F
(b) Ext. drive modules of base 1,2,3: XGR-DBDF

(3) Example using mixed modules

In a system that electrical modules are already established where distance among the stations is too far or electrical noise is severe, the section can be replaced with optical modules to build an optical/electrical mixed module network without an additional converter.

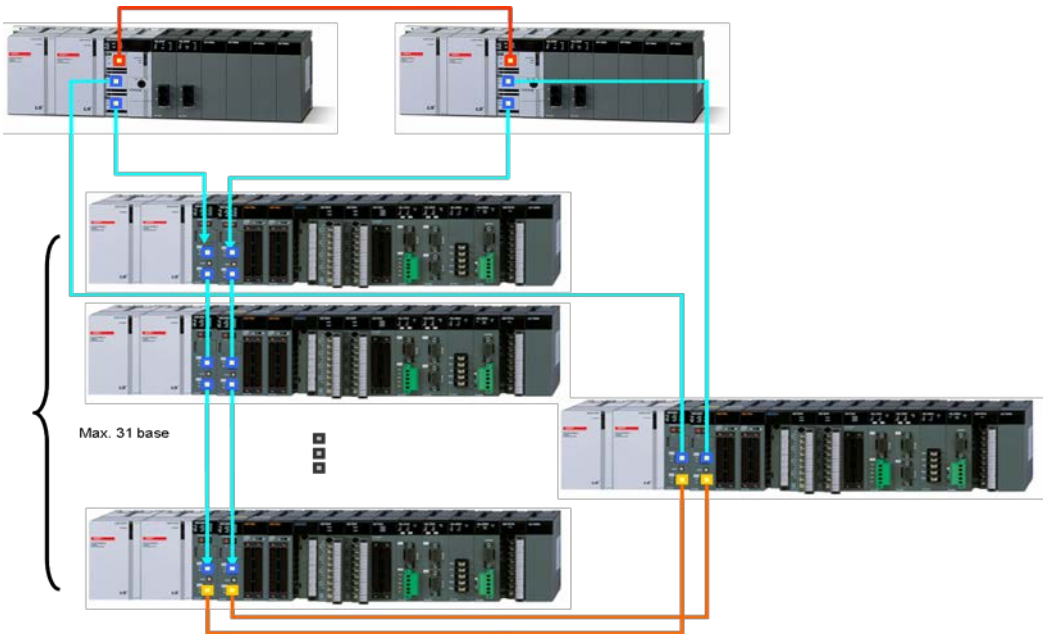

(a) CPU-A module, CPU-B module: XGR-CPUH/T
(b) Ext. drive modules of base 1,2,3: XGR-DBDT
(c) Ext. drive modules of base 1,2,3: XGR-DBDH

(4) Example of using dedicated Ethernet for upper level HMI connection and between PLCs (Single ring)

The communication network between upper level systems, existing PLCs and the controllers from other suppliers can be constructed using an Ethernet communication module (FEnet). With XGT PLCs, a high speed and reliable system can be built using an industrial Ethernet module (RAPIEnet).

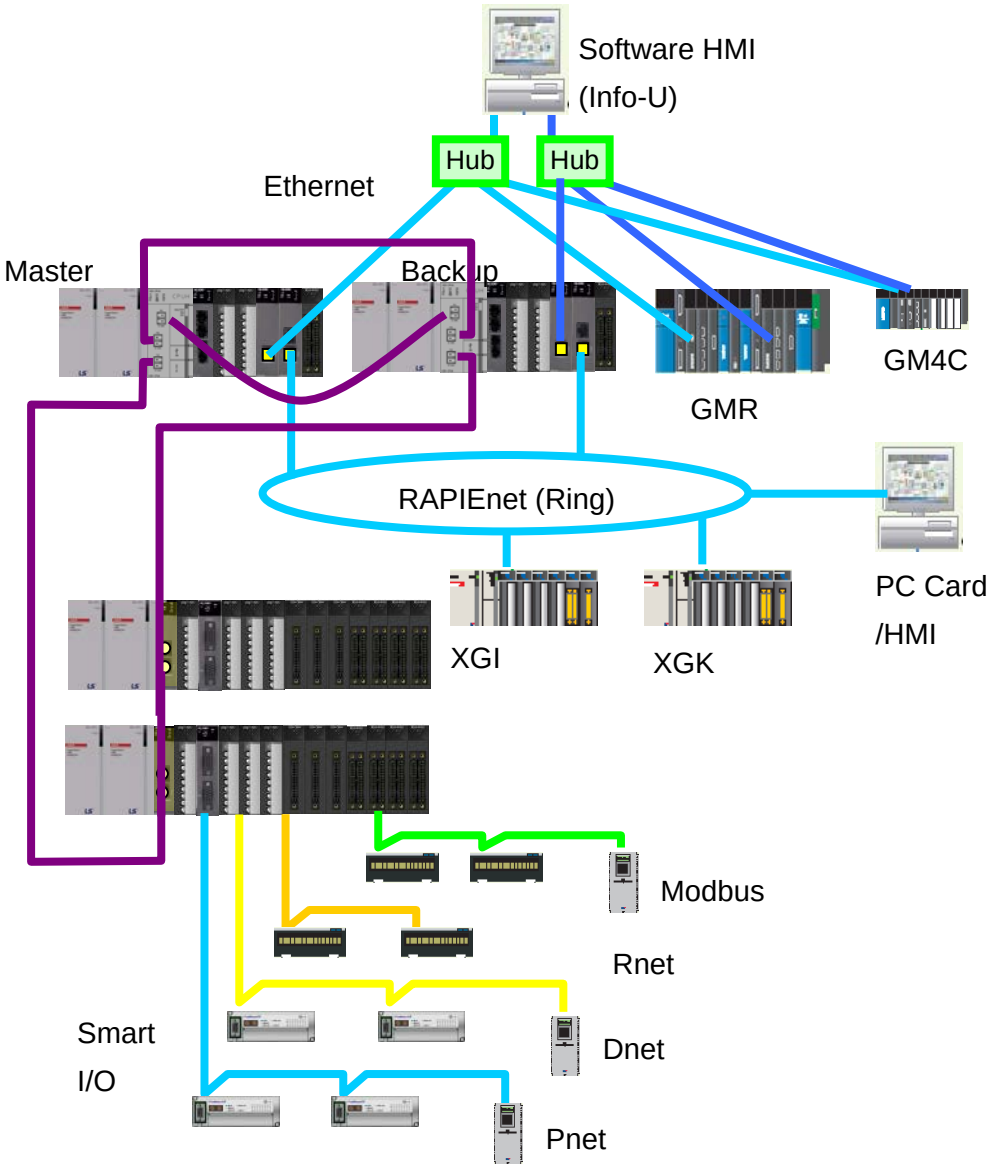

2.3 Network System

XGR Series support diversified network systems for flexible system configuration methodology.

For the communication between PLCs and upper level systems or between PLCs, Ethernet (EthNet/IP, FEnet, RAPIEnet) and Cnet are provided. For lower control network system, Profibus-DP, DeviceNet, and Rnet are provided.

2.3.1 Networking among Systems

Only EthNet/IP , FEnet and RAPIEnet communication modules are available for the redundant basic base.
All communication modules except Ethernet communication module can be installed in the expansion base.
Maximum 24 communication modules can be installed in the redundant basic base and expansion bases.
Maximum number of modules limited by functionality are as follows;

Functionality	Maximum No. of Modules
Max. No. of modules for high speed link configuration	12
Max. No. of P2P[1)] service modules	8
Max. No. of dedicated service (slave) modules	24

*Note[1)] : P2Pservice: 1 to 1 communication

2.3.2 Remote I/O System

For the control network systems of the I/O modules distributed across remote locations, Profibus-DP, DeviceNet, Rnet, Cnet, etc., are provided.

(1) I/O System Application by Network Type

Remote I/O modules are classified into base board type and block type (Smart I/O, etc.). Base board type may not be supported in certain network types.

No.	Network Type (Master)	Block-type Remote I/O (Smart IO)	Ext.-type Remote I/O
1	Profibus-DP	O	O
2	DeviceNet	O	O
3	Rnet	O	O
4	Cnet(MODBUS)	O	-

* The above specifications can be changed for functional improvement. Please refer to the technical material of the network system for detail information.

(2) Block-type Remote I/O System

(a) System Configuration

Constructed with Profibus-DP, DeviceNet, Rnet and Cnet. Block-type remote I/O can be used regardless of the PLC series in the system. Profibus-DP and DeviceNet are developed in compliance with the international standard, therefore, they can be connected with other suppliers' products as well as our own.

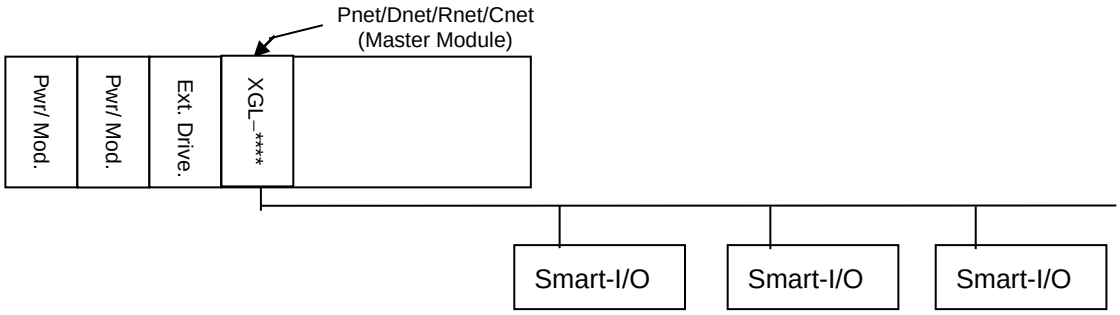

(b) I/O Allocation and I/O Numbering Scheme

1) available to allocate variable to remote IO by High Speed Link parameter
2) I, Q, M area of master can be designated as READ/WRITE area for the remote I/O area.
3) For smooth use of forced I/O setting function, it is recommended to use 'I' and 'Q' areas.
4) For the setting method of the high speed link parameters of module, see the technical documents of the network system.

Note

(1) Remote station numbers and areas must be set-up without overlapping.
(2) Input and output services, such as forced On/Off, are provided only when the inputs and outputs are allocated with I/O variables (%IW,%QW).
(3) For SMART IO connected to master module, in case you set Read area(Q) and Save area(I) through XG-PD, forced I/O setting is available.

Chapter 3 General Specifications

3.1 General Specifications

Table 3.1 shows the general specifications of XGT series.

[Table 3.1] General specifications

No.	Items	Specifications				Related standards
1	Ambient temperature	0 ~ 55 °C				
2	Storage temperature	–25 ~ +70 °C				
3	Ambient humidity	5 ~ 95%RH (Non-condensing)				
4	Storage humidity	5 ~ 95%RH (Non-condensing)				
5	Vibration resistance	Occasional vibration			-	
		Frequency	Acceleration	Amplitude	times	IEC61131-2
		5≤f<8.4 Hz	–	3.5mm	10 times each directions (X, Y and Z)	
		8.4≤f≤150 Hz	9.8m/s^2(1G)	–		
		Continuous vibration				
		Frequency	Acceleration	Amplitude		
		5≤f<8.4 Hz	–	1.75mm		
		8.4≤f≤150 Hz	4.9m/s^2(0.5G)	–		
6	Shock resistance	• Peak acceleration: 147 m/s^2(15G) • Duration: 11ms • Half-sine, 3 times each direction per each axis				IEC61131-2
7	Noise resistance	Square wave Impulse noise	±1,500 V			LS ELECTRIC standard
		Electrostatic discharge	4kV			IEC61131-2 IEC61000-1-2
		Radiated electromagnetic field noise	80 ~ 1,000 MHz, 10V/m			IEC61131-2, IEC61000-1-3
		Fast transient/bust noise	Segment	Power supply module	Digital/analog input/output communication interface	IEC61131-2 IEC61000-1-4
			Voltage	2kV	1kV	
8	Environment	Free from corrosive gasses and excessive dust				
9	Altitude	Up to 2,000 ms				
10	Pollution degree	2 or less				
11	Cooling	Air-cooling				

Note

1) IEC (International Electrotechnical Commission):
An international nongovernmental organization which promotes internationally cooperated standardization in electric/electronic field, publishes international standards and manages applicable estimation system related with.

2) Pollution degree:
An index indicating pollution degree of the operating environment which decides insulation performance of the devices. For instance, Pollution degree 2 indicates the state generally that only non-conductive pollution occurs. However, this state contains temporary conduction due to dew produced.

Chapter 4 CPU Module

4.1 Performance Specifications

The performance specifications of the redundant CPU module are as follows.

Item			Specifications			Remarks
			XGR-CPUH/F	XGR-CPUH/S	XGR-CPUH/T	
Program operation method			Scan program: Reiterative operation, Fixed cycle scan Task program: Initialization, Cycle, Internal device			
I/O Control system			Scan synchronous batch processing system (refresh system).			Direct method by command is not supported.
Program language			LD (Ladder Diagram), ST (Structured Text) SFC (Sequential Function Chart) IL (Instruction List, view function only)			
No. of Instructions	Operator		18			
	Basic function		130 types ＋ real number operation function			
	Basic function block		41			
	Dedicated function block		FB dedicated for special module, FB for process control			
Operation processing speed (basic instruction)	Basic		42 ns / command			
	MOVE		112 ns / command			
	Real number operation		±: 602 ns(S), 1,078 ns(D) x: 1,106 ns(S), 2,394 ns(D) ÷ : 1,134 ns(S), 2,660 ns(D)			S: Single real number D: Double real number
Program memory capacity			3MB			Including upload program
I/O points(installable)			23,808 points (31bases * 12slots * 64points)			
Max. I/O memory contact point			I: 131,072, Q: 131,072			
Data memory	Input variable(I)		16KB			%IW0.0.0 ~ %IW127.15.3
	Output variable(Q)		16KB			%QW0.0.0 ~ %QW127.15.3
	Automatic variable area(A)		512KB (max. 256KB retain settable)			
	Direct variable	M	256KB (max. 128KB retain settable)			
		R	64KB * 2 blocks			64KB per block
		W	128KB			Same area with R
	Flag variable	F	4KB			System flag
		K	16KB (PID 256 loops)			PID flag
		L	22KB			High speed link flag
		N	42KB			P2P flag
		U	32KB (31 base, 16 slot, 32channel)			Analogue refresh flag

Item		Specifications			Remarks
		XGR-CPUH/F	XGR-CPUH/S	XGR-CPUH/T	
Timer		• No point limit • Time range: 0.001~ 4,294,967.295 second (1,193 hours)			Occupying 20 bytes of automatic variable area per point
Counter		• No point limit • Coefficient range : 64 bit expression range (-32,768 ~ +32,767)			Occupying 8 bytes of automatic variable area per point
Program structure	Total no. of programs	256			
	Initialization task	1(_int)			
	Fixed cycle task	32 (range: 0~31)			
	Internal device task	32 (range: 64~95)			Processed at scan END
Operation mode		RUN, STOP, DEBUG			
Restart mode		Cold, Warm			
Self diagnosis function		Operation delay monitoring, memory fault, I/O fault, battery fault, power fault and etc			
Data protection in case of power failure		Setting retain area in the Basic Parameter Retain setting of auto variable			
Max. expansion base		31 stages			One base per stage
Max. length between expansion base		Optical (2km)	Optical (15km)	Electrical (100m)	
Redundancy performance	Operation monitoring between CPU	Redundant monitoring by Sync. Line and ring type I/O network			
	Data backup between CPU	1 G bps optical line, max. length 200 m (recommended)			
	Data Sync. Method between CPU	Set in the Redundancy Parameter			
	Delay in case of redundancy operation	Proportional to data which master transmits to backup - Max. 15ms - optimization available by user setting Basic 15ms + user designated amount (2kword) * 0.250ms/2kword			Refer to 5.1.4
	Master switching time	22ms			Refer to 5.1.4
	Operation delay in case of standby start	About 10% more than single operation scan time			Refer to 5.1.4
Internal consumption current (mA)		1,310 ㎃		980 ㎃	
Weight (g)		276 g		257 g	

4.2 Names and Functions of Parts

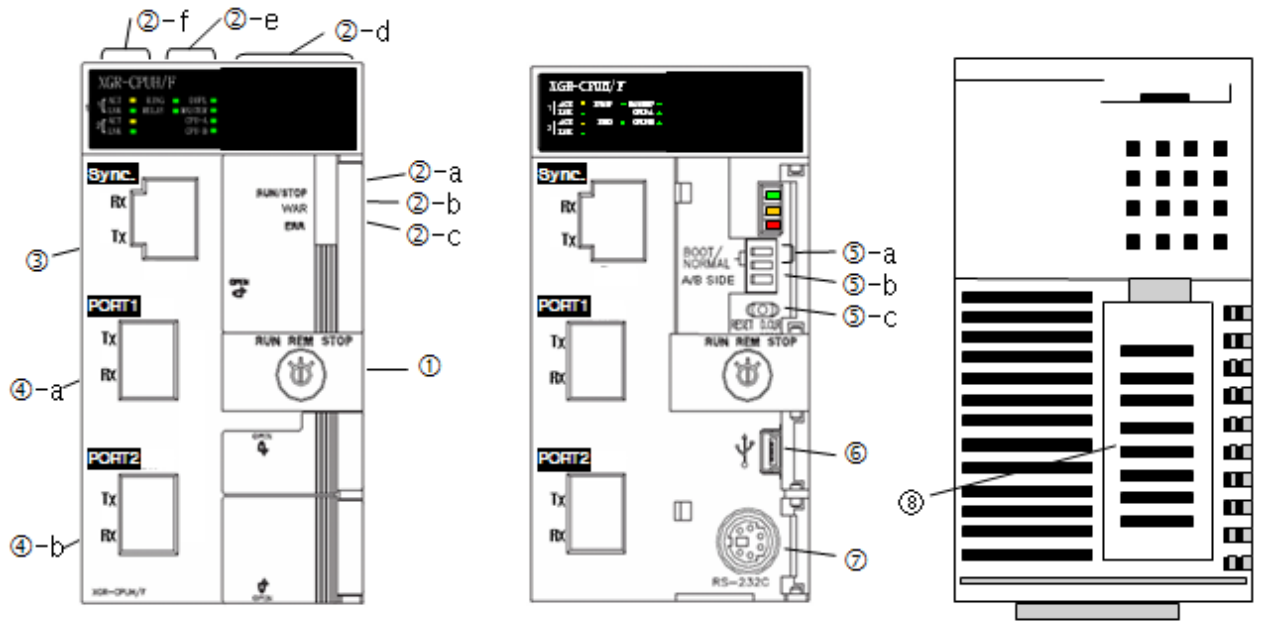

No.	Name	Description
①	Operation mode switch RUN/REM/STOP	Sets the operation mode of CPU module via key switch. • RUN mode: runs program • STOP mode: stops program • REM mode: mode selectable by programming tool ▶ RUN -> REM, STOP -> REM: keeps previous mode. ▶ RUN -> RUN, REM -> STOP: changes the mode to RUN, STOP respectively ▶ In case operation mode is not REM, writing program and changing operation mode are not available by programming tool. (Monitoring and changing the data are available)
②- a	RUN/STOP LED	Shows the operation status of the CPU module. • Green light: 'RUN' mode ▶ 'RUN' operation by mode switch (local run) ▶ 'RUN' operation by programming tool with mode switch set as 'REM' (Remote run) • Red light: 'STOP' mode ▶ 'STOP' operation by mode switch ▶ 'STOP' operation by programming tool with mode switch set as 'REM' (Remote stop)

No.	Name	Description
②- b	WAR. LED	• On(yellow): displaying an warning ▶ Force I/O setting ▶ Skip I/O/Fault mask setting ▶ Run when Fuse error ▶ Run when I/O module error ▶ Run when special module error ▶ Run when communication module error ▶ Warning abnormal RTC data ▶ Warning existence of base which doesn't participate in the operation ▶ Abnormal operation stop warning ▶ Task collision warning ▶ Abnormal battery warning ▶ Warning detection of light error of external device ▶ High speed link setting warning ▶ P2P setting warning ▶ Fixed cycle error warning ▶ Abnormal base power module warning ▶ Abnormal base skip cancellation warning ▶ Abnormal base number setting warning ▶Warning redundant configuration ▶Warning OS version inconsistency ▶Warning Ring topology configuration • Off: No warning
②- c	ERR. LED	• On(red): displays error makes the operation unavailable ▶ CPU configuration error ▶ Module type mismatch error ▶ Module detached error ▶ Fuse disconnection error ▶ Detection of heavy trouble of external device ▶ Basic parameter error ▶ I/O parameter error ▶ Special module parameter error ▶ User program error ▶ Program code error ▶ CPU abnormal end or malfunction ▶ Base power error ▶ Scan watchdog error ▶ Base information error ▶ Standby CPU run error ▶ Expansion base detached error ▶ Redundant parameter error ▶ Module insertion location error ▶ Expansion base no. overlapped error ▶ Redundant Sync. Error ▶ A/B side overlapped setting error ▶Base abnormal configuration error • Off: ▶ No error

No.	Name	Description
②- d	Displaying operation status	• Displays operation status with 4 characters ▶ Normal operation ▶ Warning ▶ Error (Refer to XGR error code)
②- e	Displaying redundancy status	• Displays operation/installation status of CPU system. ▶ RED: On when redundant operation, Off when single operation ▶ MASTER: on; CPU operating as master, off; standby CPU ▶ CPU-A: on when CPU position designation switch (⑤-b) set as A ▶ CPU-B: on when CPU position designation switch (⑤-b) set as B
②- f	Displaying expansion network status	Displays communication status with expansion base • ACT On (yellow): relevant channel is operating • LINK On (Green): link of relevant channel is connected ▶ 1 indicates upper channel (④-a), 2 indicates lower channel (④-b). • RING On (Green): Expansion network is configured as Ring. • Ring Off: Expansion network is not established or configured as Line because part of Ring fails
③	Sync. connector	Data sharing and monitoring between two CPUS.
④-a ④-b	Connector for expansion connector	Connector used for connecting with expansion base • For easy Ring configuration, two connector supported • Two types, optical/optical, electrical/electrical
⑤-a	BOOT/NORMAL switch	Used to download OS at first time • BOOT/NORMAL (right side): used for normal operation • BOOT/NORMAL (left side): used to download OS (OS download mode). **Caution** (1) BOOT/NORMAL switch always should be set to right side. (2) In case of setting to left side, system doesn't operate properly and It is not allowed for the user to use (3) BOOT/NORMAL switch is not allowed to set to left side for OS downloading
⑤-b	A/B side switch (CPU position designation switch)	Designates the logical position of CPU • Left side means CPU position is set as A • Right side means CPU position is set as B • Two CPU should have a different position. (available to check in the programming tool) • In case two PLC are set as same position, the lately started one cause "E101" error

<table>
<tr><th>No.</th><th>Name</th><th>Description</th></tr>
<tr><td>⑤-c</td><td>Reset/D. Clear switch</td><td>
You can enable/disable Reset/D.Clear switch in “XG5000 → Basic Parameter → Basic Operation Setup”

1. When Reset switch is enabled
<table>
<tr><th>Operation</th><th>Result</th></tr>
<tr><td>move to left → return to center</td><td>Reset</td></tr>
<tr><td>move to left → keep 3 seconds or above → return to center</td><td>Overall reset</td></tr>
</table>

2. When D.Clear switch is enabled
<table>
<tr><th>Operation</th><th>Result</th></tr>
<tr><td>move to right → return to center:</td><td>General data area and retain area (M, Automatic variable) will be cleared.</td></tr>
<tr><td>move to left → keep 3 seconds or above → return to center:</td><td>General data area, retain area (M, Automatic variable) and R area will be cleared.</td></tr>
</table>

⚠ Caution
(1) Data clear function is only executed in stop mode.
</td></tr>
<tr><td>⑥</td><td>USB connector</td><td>Connector for connecting with peripheral (XG5000 etc.) (supports USB 1.1)</td></tr>
<tr><td>⑦</td><td>RS-232C connector</td><td>Connector for connecting with peripheral (XG5000 etc.)</td></tr>
<tr><td>⑧</td><td>Backup battery cover</td><td>Backup battery cover</td></tr>
</table>

4.3 Battery

4.3.1 Battery specifications

Item	Specifications
Nominal Voltage / Current	DC 3.0 V / 1,800 mAh
Warranty period	5 years(at ambient temperature)
Applications	Program/data backup, RTC operation in case of power failure
Type	LiMnO2 Lithium Battery
Dimensions (mm)	ϕ 17.0 X 33.5 mm

4.3.2 Cautions for usage

(1) Do not heat it up nor weld the electrode(it may reduce the life)
(2) Do not measure the voltage with a tester nor short-circuit it(it may cause a fire).
(3) Do not disassemble it without permission.

4.3.3 Battery life

The XGR-CPUH is designed to use it for 7 years and longer at any environment. However, the battery life varies depending on the duration of power failure, operation temperature range and etc.
If the battery voltage level is low, the CPU module generates a warning of 'Low Battery Level'. It can be checked by the LED of the CPU module, flag and error message in XG5000.
If it is occurred to a low battery level warning, please shortly change the battery.

Caution

In general, it generates the warning after 7 years from the purchase, but if the current is excessively discharged due to defective battery or leakage current, it may warn it earlier. If it warns shortly after replacing a battery, the CPU module may need A/S service.

4.3.4 Replacement

A battery used as a backup power for program and data in case of power failure needs replacing regularly. The program and data is kept by the super capacity for about 30 minutes even after removing the battery, but it needs urgently replacing it as soon as possible.

Replace a battery in accordance with the following steps.

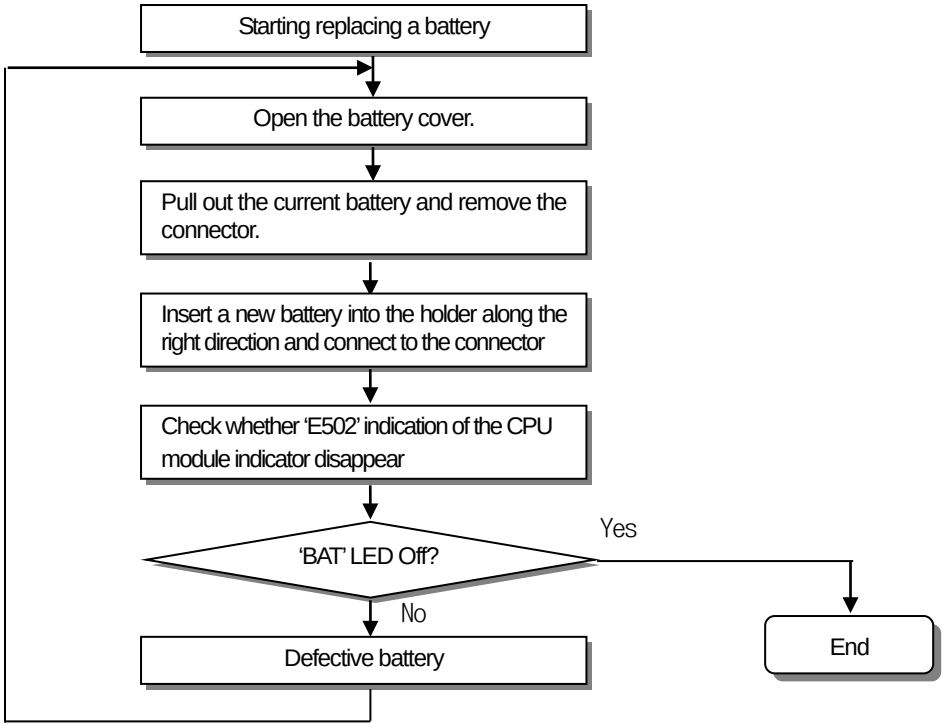

Chapter 5 Program Constitution and Operation Method

5.1 Program Basics

5.1.1 Program Structure and Execution

The program for the XGR PLC is made out with XG5000, compiled into an executable program, and transmitted to PLC for execution.

(1) The programs can be classified into scan programs and task programs. The scan programs are executed at every scanning, and the task programs are executed by a task.
- Scan program: the program executed every scan repeatedly
- Task program: the program executed by task

(2) A scan program runs from the first to the last step registered in the project in the registered order, and terminates the scanning (END). The entire process is referred to as “1 scan.’

(3) This process methodology which runs a program from the beginning to the end and then runs the entire process again, is called ‘cyclic operation method.’

(4) Before starting the operation of a scan program, the status of the input module is read and saved in the input image area, and the status of the output image area is outputted to the output module when the operation of the scan program is completed. This process is called ‘I/O Refresh.’

(5) XGR PLC series is based on the cyclic operation method. In the operation process, input or output status is not entered directly, but the operation is executed by I/O refreshing by scan unit basis. To this end, the statuses of the input and output contact points are stored in the memory area of the PLC. This area is called image area.

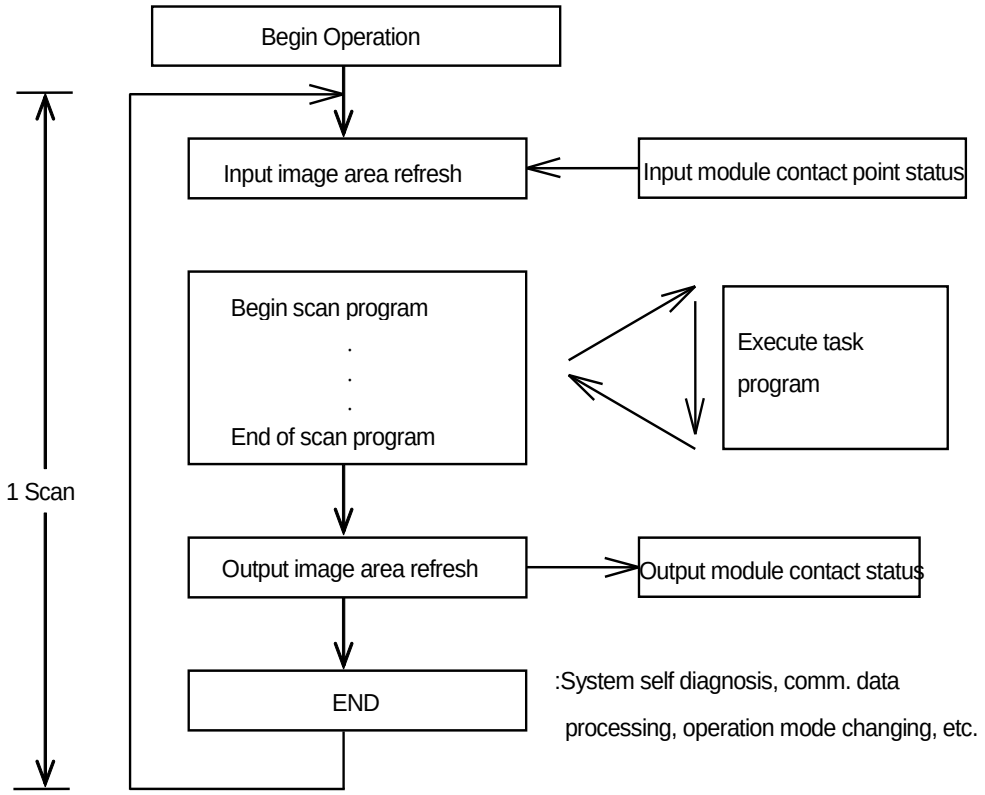

5.1.2 Program Execution Methodology

(1) Cyclic Operation Method (Scan)

A program scan is an operation cycle of a program from the first step to the end step. In a cyclic operation, the first step is restarted after the end step of the previous scan has been completed. The table below shows this process by step.

Step	Process Description
Operation	• With the program downloaded into the PLC, the instruction from the user is received.
Initialization processing	• Step to start scan: it runs once as follows if it is turned on or if you reset it. ▸ I/O module reset ▸ self-diagnostic execution ▸ Data clear ▸ Address allocation and type registration of I/O module
Refresh input image area	• Before starting an operation of program, it reads the status of Input module and saves it to the input image area ▸ When ON time of input data is shorter than CPU scan time, it is not reflected to ladder program
Program operation processing Program starts ⋮ Program ends	• Execute operations from the first to the last step of a program.
Refresh output image area	• Once a program's operation ends, it outputs the content saved in the output image area to the output module.
END	• As a step that the CPU module ends 1 scan process and returns to the first step, it processes the follows. ▸ Updating the current values of Timer, Counter and others ▸ Executing user event and data trace service ▸ Execute self-diagnostic ▸ Execute high speed link and P2P service ▸ Check the status of mode setting key switch

Note

The synchronization between the data of the master CPU and standby CPU begins after the start-up of the standby CPU. See 5.3 Operation Mode for the details of redundant operation.

(2) Interrupt Operation Method (Fixed Cycle Task Program)

In the interrupt operation method, if it is required to execute a task program with priority during scan program operation, the current scan program operation is interrupted and the task program is executed. When the task program operation is completed, the system returns to the previous scan program operation.
An interrupt signal instructs the CPU to execute a task program with priority.
A typical interrupt operation is the fixed cycle interrupt operation. In this method, the interrupt signals are generated at the times preset by the user to execute task programs. After the completion of a task program, the system returns to the scan program.

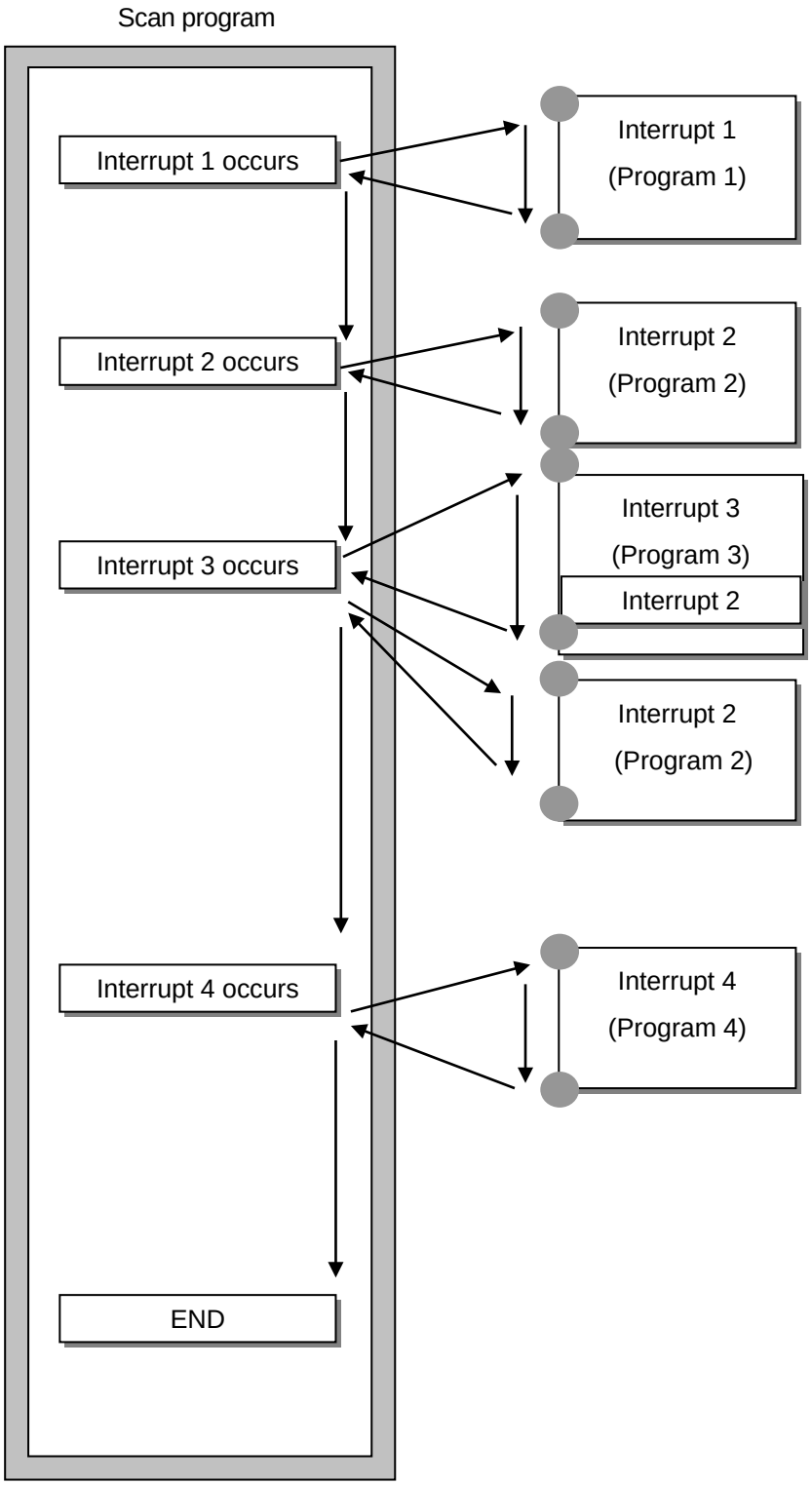

(3) Constant Scan

Constant scan is an operation method which repeats the execution of a basic scan program at fixed cycle time. In case that the fixed cycle time is longer than the time required for executing the scan program, the system waits for the remaining time, and restarts the scan program at the beginning of the next cycle time. Therefore, different from the fixed cycle task program, the program can be executed matching the I/O refreshing and synchronization. In such case, the scan time is indicated excluding the waiting time.
On the contrary, if the fixed cycle time is setup shorter than the time elapsed for the scan program execution, the '_CONSTANT_ER' flag is turned 'ON' and the operation is executed with the time during which the operation can be executed.

The constant scan can be setup with the basic parameters of the XG5000.

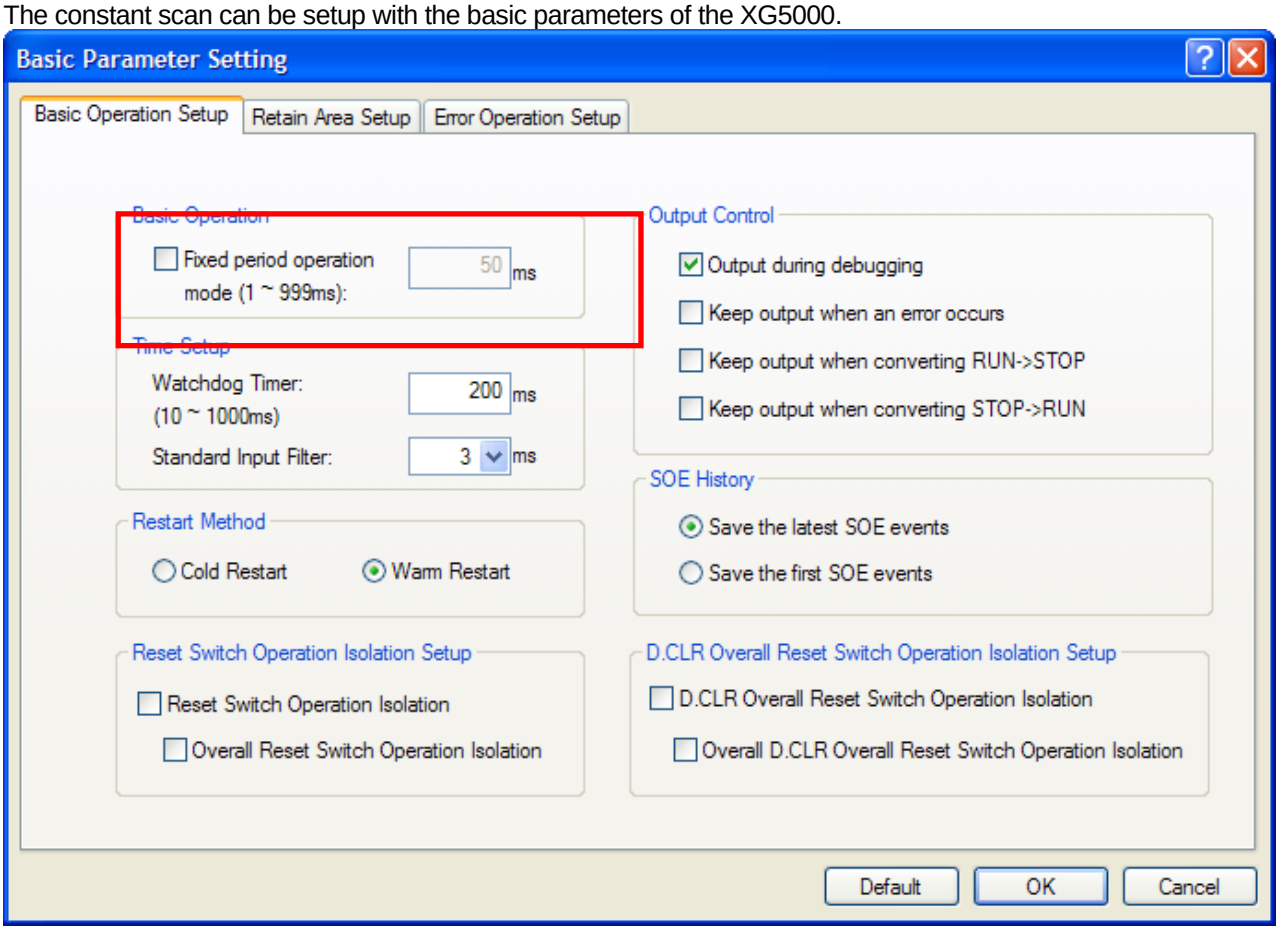

Note

When configured for a constant scan operation, the scan time is indicated as follows.
The maximum and current scan times are indicated with the scan times setup with the fixed cycle operation parameters, and the minimum scan time indicates the actual time elapsed for the program execution deducted with the waiting time.

5.1.3 Operation of instantaneous interrupt

The CPU module detects instantaneous interruption when the voltage of input power supplied to the power module is lower than the nominal value.
If the CPU module detects instantaneous interruption, it processes operation as follows.

(1) In case of instantaneous interruption within 20ms occurs

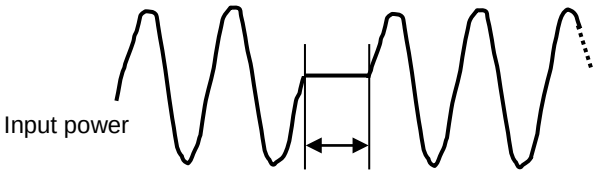

Instantaneous interruption within 20ms

(a) It stops an operation with the output at the moment of instantaneous interruption maintained.
(b) It resumes the operation once the interruption is removed
(c) The output voltage of power module is maintained within the specified value.
(d) Even though an operation stops due to instantaneous power failure, timer measurement and interrupt timer measurements still work normally.

(2) In case of instantaneous interruption over 20ms occurs

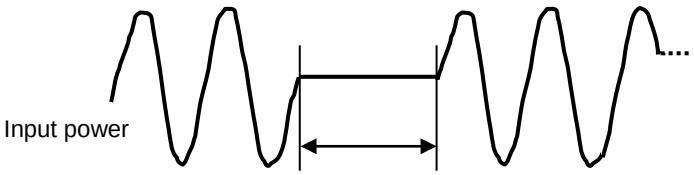

Instantaneous interruption over 20ms

(a) It executes initialization process such as when it is turned on
(b) In a redundant CPU operation, the system triggers CPU switch-over.

(3) If the system has a redundant power, the operation will be one of followings;

(a) Instantaneous power interruption in one of two power modules which have been in operation;
- the other power module keeps operation, without interrupting PLC operation.
(b) Instantaneous power interruption in both power modules by shorter than 20ms;
- the modules operate as described in Clause 1) above.
(c) Instantaneous power interruption in both power modules by longer than 20ms;
- the modules operate as described in Clause 2) above.

Note

(1) What is instantaneous interruption?
It means the status that the power supply voltage specified in the PLC is out of the allowable variance range and falls, and especially, a short term interruption(several ms ~ dozens of ms) is called instantaneous interruption.
(2) CPU switching
In a redundant CPU operation, if a power interruption longer than 20ms occurs in all the power modules of the master CPU, the operation is switched over to the standby CPU. For the details of redundant operation, see 5.3 Operation Mode.

5.1.4 Scan Time

The time required to complete all steps from the first step (0 step) to last step, that is, a time taken for one control operation is called 'scan time.' It is directly related to the control performance of the system.

(1) Operation and performance of XGR

The major factors which influence scan time are program operation time, I/O data process time, communication service time, and the data synchronization between the master and standby CPUs. By utilizing the hardware relay method for the data exchange between expansion drive modules, the data communication performance of the XGR is greatly improved. In addition, the scan time is greatly reduced by MPU's ladder program execution and the paralleled execution of the I/O data scanning by bus controller.

In a single CPU operation, the scan process times of CPU are as follows.

Item	Content to be processed	time
Process time of scan program	Scan program+ Task program	42ns per 4 byte of execution program
Process time of basic base	Module process	Communication module: within 200 ㎲ per one
	Communication service	Within 500 ㎲ per one service
Process time of Expansion base	Every expansion base	Within 300 ㎲ per one base
	Module process	Digital I/O: within 10 ㎲ per one Special module: within 30 ㎲ Communication module: within 150 ㎲
	Communication service	Within 1000 ㎲ per service
	PUT/GET instruction process	Different according to data ~ 0.5 kbyte : 800 ㎲ or less ~ 1 kbyte : 2.5 ㎳ or less ~ 4 kbyte : 8 ㎳ or less ~ 8 kbyte : 15 ㎳ or less
Process time of system	Basic O/S process routine, module error check, Fault mask, I/O skip etc.	Different according to setting environment In case of normal operation, within 4ms

(2) Calculation of scan time (Single CPU operation)
The CPU module executes controls along the following steps. A user can estimate the control performance of a system that the user is to structure from the following calculation.

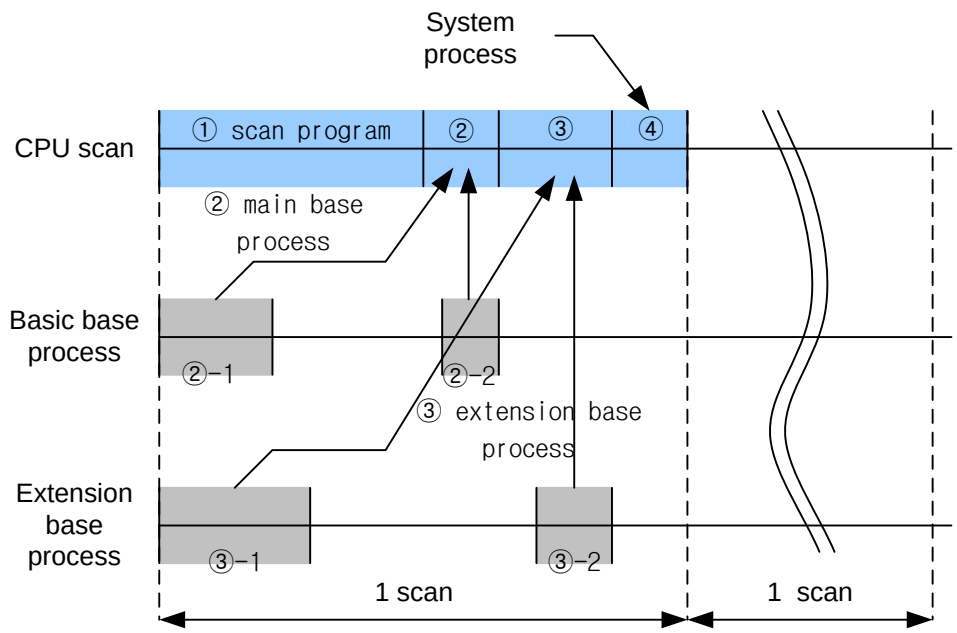

Scan time = ① scan program process + ② basic base process + ③ expansion base process + ④ system process

① Scan program process = program size/4 x 0.042 (usec)

(For correct scan time calculation, add the execution speed of the applied instructions.)

② Basic base process

②-1. module process: processes refresh data of module in basic base

- Commmunication module: 200 ㎲ or less per one

②-2. communication service process: executes HS, P2P service

- 500 ㎲ or less per one service

③ Expansion base process

③-1. module process: processes refresh data of module in basic base

- Process time per expansion base: 300 ㎲ or less per expansion base
- Digital I/O: 10 ㎲ or less per one
- Special module: 30 ㎲ per one
- Communication module: 150 ㎲ or less per one

③-2. Communication service process and PUT/GET instruction process: executes HS, P2P service and PUT/GET instruction set by user

- Communication service process: 1000 ㎲ or less per service
- PUT/GET instruction process
  - ~ 0.5 kbyte : 800 ㎲ or less
  - ~ 1 kbyte : 2.5 ㎳ or less
  - ~ 4 kbyte : 8 ㎳ or less
  - ~ 8 kbyte : 15 ㎳ or less

④ System process: executes system internal process includig basic O/S process routin, battery check, module error check, I/O skip, forced I/O, loader service etc.

- different according to the environment In case of normal 4ms or less

Example

CPU(program 32KB) + 6 32-point I/O modules + 6 analog modules (total PUT/GET size 1000byte) + 4 communication modules (two in basic base, other two in expansion base, one communication service setting for each module)
What is the scan time of above system (the number of expansion base is 2)
Scan time(㎲) = ladder process time + basic base process time + expansion base process time + system process time
= (32768/4 x 0.042) + (200 x 2(two communication modules) + 500 x 2) + (300 x 2(expansion base) + (10 x 6)+(30 x 6)+(150 x 2) + 1000 x 2 + 2500(PUT/GET)) + (4000)
= 11384 ㎲
= 11.4 ㎳

(3) Scan time monitor

In an actual XGR CPU operation, the actual scan time can be obtained by monitoring following data.

(1) Scan time is saved into the following flag(F) areas.

_SCAN_MAX : max. value of scan time(unit of 0.1ms)

_SCAN_MIN : min. value of scan time(unit of 0.1ms)

_SCAN_CUR : current value of scan time (unit of 0.1ms)

_SCAN_MAX, _SCAN_MIN value can be initialized using _SCAN_WR flag.

If the _SCAN_MAX is larger than WDT (Watch Dog Timer) value, a system error occurs. The WDT time can be setup with the basic parameters.

(4) Scan Time in Redundant Operation

In redundant operations, compared with single CPU operation, the scan time substantially increases due to the system data sharing between the CPUs. The scan time also varies according to the data volume setup by the user in the redundancy parameter setting area. The increase in the scan time by data volume is as follows.

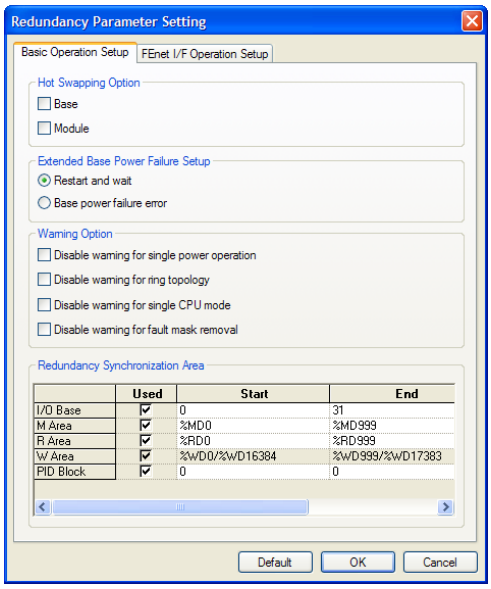

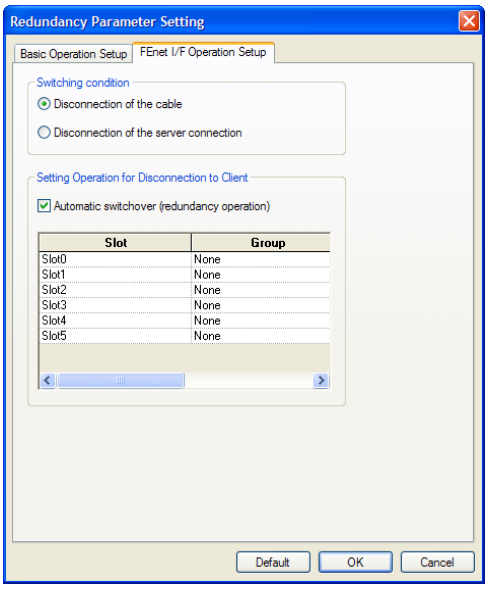

Redundancy parameter	Contents	Operation
Hot swapping option	Base	Though base error occurs in normal RUN mode, system except that base operates. And if that base is restored, it operates normally.
	Module	Though module is disabled, module detachment error doesn't appear. If that module is enabled, it operates normally.
Expansion base power failure setup	Restart and wait	When two power modules of expansion base are off, system goes to WAIT mode (Ebxx)
	Base power failure error	When two power modules of expansion base are off, CPU error appears
Warning option	Disable warning for single power operation	Disables warning message when one between two power modules in expansion base is off
	Disable warning for line Topology	Disables warning message when becoming line topology
	Disable warning for Single CPU Mode	Disables warning message when becoming Single CPU Mode
	Disable warning message for fault mask removal	Disables warning message when fault mask is removed.
Communication operation setting	Disconnection of the cable	When the cable is disconnected, it is instantly switched. (within 1s)
	Disconnection of the server connection	Master automatic switchover (redundancy operation) → When Master/Standby is acting as FEnet server, if the cable of the Master is disconnected, Standby becomes Master.

(a) Redundant CPU system data: share basic data, e.g., system flag, communication flag, etc. (2.8ms)
(b) Redundancy parameter setting data: synchronization time in each area is as follows;
I/Q base: 1ms/32 bases
M area: approx. 250 ㎲ per 2 kwords. Approx. 16 ms for synchronizing 128kword
R area: approx. 1.5ms per 2 kword. Approx. 12ms for max. 16 kword synchronization. (When 2 kword in R area is transmitted, 2 kword in W area are also transmitted; total 4 kword are transmitted)
PID Area: 016.7 ㎲ required for each PID setting one loop. When max. 8 blocks are synchronized, approx. 4ms is required.
Automatic variable area: 32KB → 2.5ms required

Example

CPU(program 32KB) + 6 32-point I/O modules + 6 analog modules (total PUT/GET size 1000byte)
+ 4 communication modules(two in basic base, other two in expansion base, one communication service for each one module) what is the scan time of above system? (Two expansion bases, synchronizes M area 2kword and PID 2 blocks)
Redundancy Run scan time = single Run scan time + time for synchronizing redundancy data
= Single Run scan time + redundancy system data+ I/O base + synchronizing M area and PID area
= 11.4ms + 2.8ms + 1ms + 0.25ms + 0.5 x 2
= 16.45

(5) Delay Time at Entering Redundancy Operation

When a redundant CPU is added to single CPU operation, the scan time of the current scan cycle is increased temporarily, for the standby CPU to be initiated to enter redundancy operation mode. Since the data synchronization is carried out by 10% equivalent to the scan time of single operation, the scan time during the data synchronization increases by about 10% compared with single operation.

Caution

(1) When the standby CPU is activated to change the system from single operation to redundant operation, the scan time increases for a short time to synchronize the program and data from the master CPU to the standby CPU.

(2) It should be noted that, during single mode operation, including when the standby CPU is not in operation, data is not synchronized between the master CPU and standby CPU. Therefore, the data may differ from each other CPU.

5.2 Program Execution

5.2.1 Program Type

The programs for the XGR PLC can be classified as presented in the chart below, according to their conditions of execution. Total 256 programs can be used.

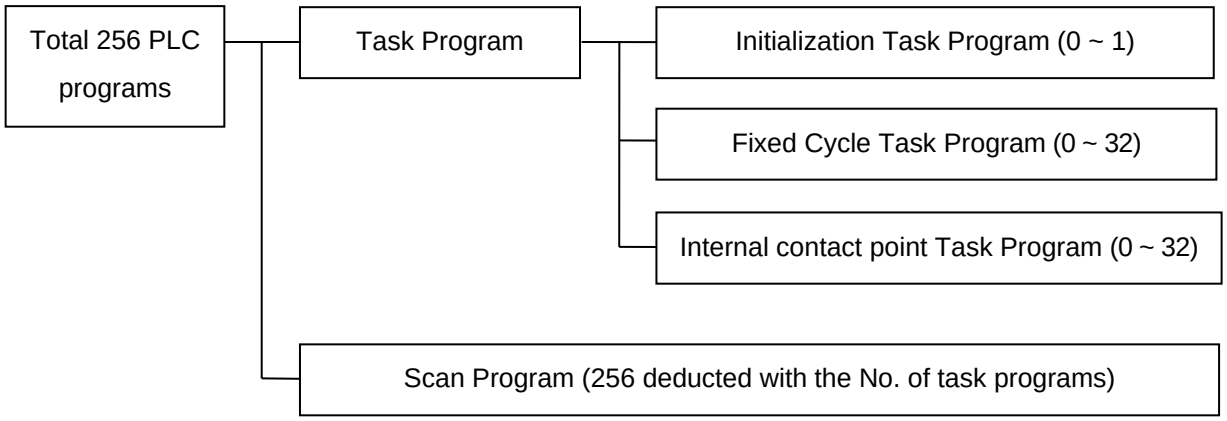

5.2.2 Program Execution

(1) Task Program

(a) Initialization Task Program
The initialization task programs are used for system initialization when starting PLC operation in cold or warm restart mode.
During the execution of an initialization task program, the system operation status information flag _INIT_RUN is turned to ON.
The initialization task program executes cycle operation including I/O refresh until the _INIT_DONE flag is ON.

(b) Fixed Cycle Task Program
Fixed cycle task programs are executed in repetition at the cycle setup in the task.

(c) Internal Contact Point Task Program
The internal contact point task programs are executed when such events as rise, fall, transition, on, or off of the internal contact points occur.
The point of time of execution is determined by the condition of event occurrence after the completion of scan program.

(2) Scan Program

In order to process the signals which are repeated regularly in each scan, the operation is executed from the first (0) step to the last step in the sequential order.
In case that a condition of interrupt execution is met by the fixed cycle task or interrupt module during the execution of scan program, the current program is suspended, and the respective task (interrupt) program is executed. The occurrence of an event of internal contact point program is checked when the scan program has been completed.

Caution

- Of the initialization tasks, the first scan On/Off is executed for the first scan only, and not executed from the next scan until the completion of _INIT_DONE.
- The above mode applies when the master CPU is started from stop state. Since the standby operates according to the status of the master, restart mode does not apply.
- For manual reset switch activation in redundant operation, please take care of followings;
Activating the reset switch of the master CPU will restart the entire system, but activating the reset switch of the standby CPU will restart the standby CPU only.
- When activating the Run/Stop switch during redundant operation, please take care of following;
If you activate Stop switch of CPU operating as master, CPU operating as master will become Stop mode and standby CPU will operates as master

5.2.3 Restart Mode

The restart mode sets up the method of initializing variables and the system at the start-up of PLC operation. Restart mode has two types; cold and warm restart, which can be set up in the basic parameters of the XG5000.

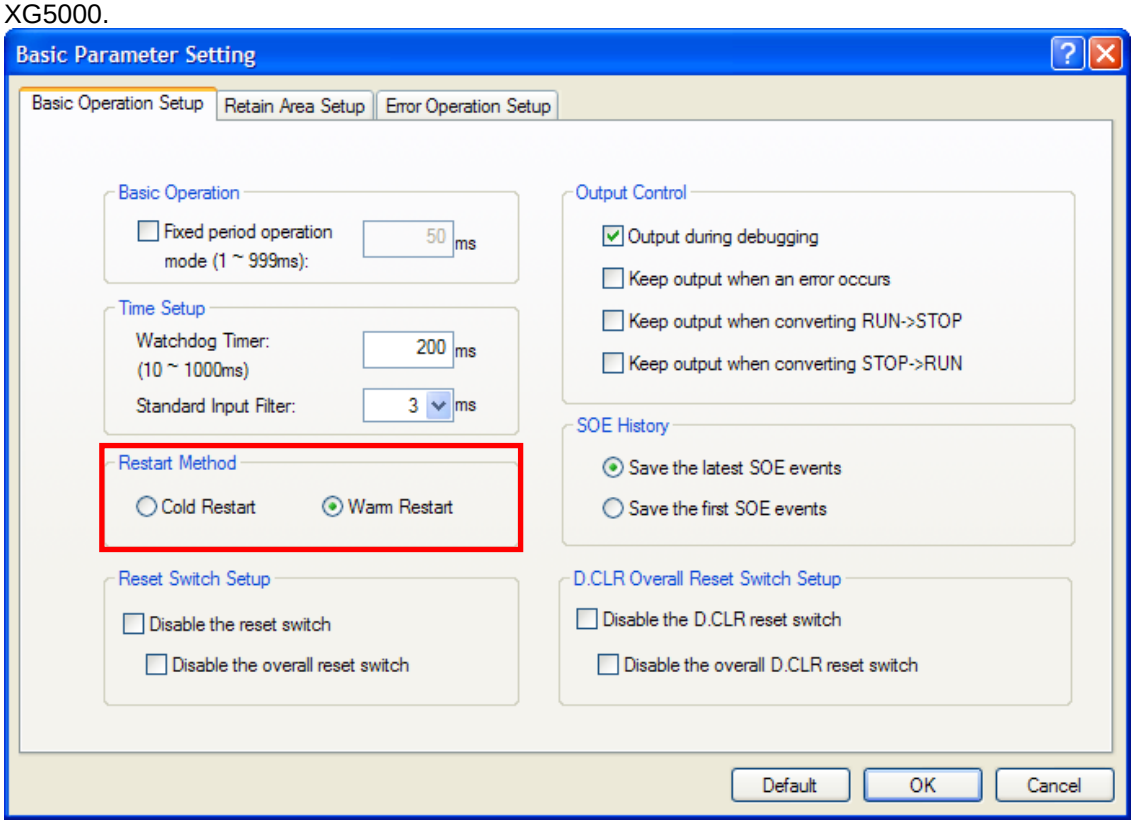

When the standby CPU starts up, it executes the initialization according to the restart mode and receives the program and data backup from the master. When set up in flash operation mode, it receives the flash data backup from the master too.

When the standby CPU is switched to master CPU during operation, it is not a restart, therefore, no further action is taken.

The conditions of the execution of the restart modes are as follows.

(1) Cold restart

(a) All data is reset (deleted) to “0.” Here, the ‘all data’ means the M area, R area, and automaton variables. The flag area, such as PID, which does not belong to this category is not deleted.

(b) Only the variables whose initial values are set up are reset to the initial values.

(c) Even though the parameter is set up to warm restart mode, at the first running after changing the program to be executed, the following program will be executed with cold restart mode.

(d) Pressing the manual rest switch for 3 seconds (same as the overall reset of the XG5000), the system will start in cold restart mode regardless of the set up restart mode.

(2) Warm restart

(a) The data which was set up to maintain previous value will maintain the previous value. The data which has user defined initial value will be reset to the initial value. Other data will be deleted to “0.”

(b) When set up in warm restart mode, too, the first run, after an interruption by program download or error, will be started in cold restart mode.

(c) When set up in warm restart mode, if the data is abnormal (data was not maintained during a power failure), the system will be started in cold restart mode.

(d) Pressing the manual reset switch for less than 5 seconds during power-on, same as the reset instruction in the XG5000, if the setting is warm restart mode, the operation will begin in warm restart mode.

Data initialization according to the restart modes are as follows.
The variables related with restart mode are default, retain, and initialization variables. The method of initializing the variables in the execution of restart mode is as follows.

Mode / Variable	Cold	Warm
Default	Initialize to ‘0’	Initialize to ‘0’
Retain	Initialize to ‘0’	Maintain the previous value
Initialization	Initialize to user defined value	Initialize to user defined value
Retain & Initialization	Initialize to user defined value	Maintain the previous value

5.2.4 Task Program

This section describes the programming and configuration of the task programs with XG5000 which is the programming software of the XGR.

(1) Programming Task Programs

(a) In the project window of the XG5000, select the PLC to which the task is added. Click the right button of mouse, and select [Add Item]-[Task].

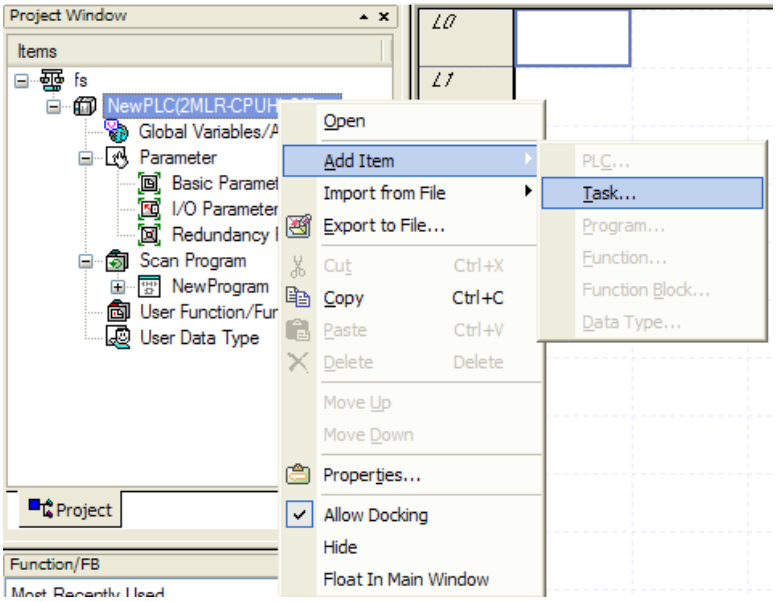

(b) In the Task dialog box, set up the task to be added, and click Confirm button.

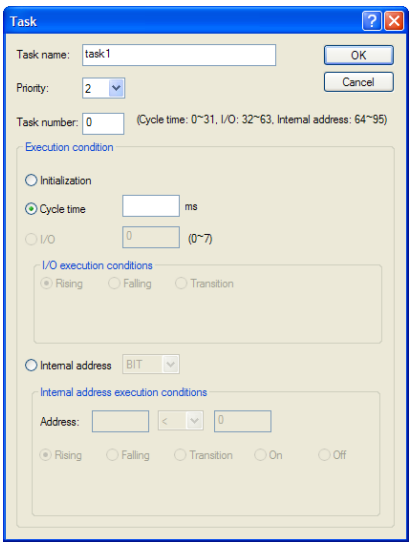

Note

External contact point task is not supported in the XGR PLC Series, and will be developed in the near future.

(c) The configured task will be displayed as shown in the window below. For detail configuration, see the User Manual of the XG5000.

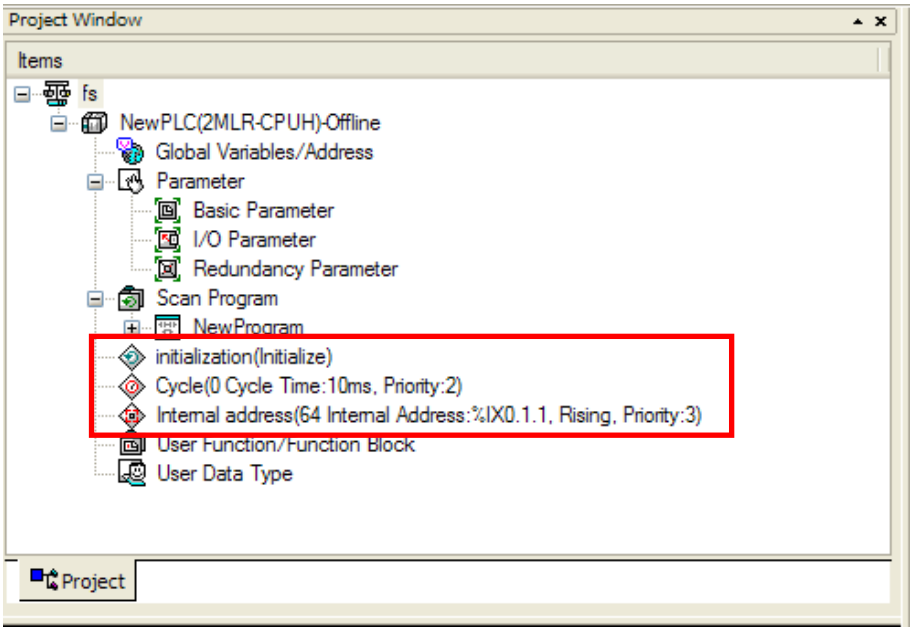

(2) Task Types

The below table summarizes the types and functions of tasks.

Type / Spec.	Initialization	Cycle time	Internal address
Number	1	32	32
Start-up condition	When entering RUN mode, prior to starting scan program	Cycle time (settable up to 4,294,967.295 seconds at the unit of 1ms)	Conditions of internal device designation
Detection/execution	Execute until the flag _INIT_DONE is ON	Cyclically execute at the pre-defined interval.	Checks and Executes after completing scan program
Detection delay time	-	Delayed as long as 0.2ms to the max.	Delayed as long as the max. scan time.
Execution priority	--	Setting 2 ~ 7 levels (level 2 is the highest priority)	Setting 2 ~ 7 levels (level 2 is the highest priority)
Task number	-	Assigning it between 0~31 so that it is not duplicate	Assigning it between 64~95 so that it is not duplicated

(3) Processing method of task program

It describes the common processing method and cautions of task program

(a) Features of task program

• Task program does not reiteratively be processed like a scan program and instead, it is executed only when the execution conditions occur. Make sure to remember this when creating a task program.

• For instance, if a task program with 10 seconds of fixed cycle is used with a timer and counter, the timer may have an error of 10 seconds maximum while the counter checks every 10 seconds, any counter input changed within 10 seconds is not counted.

(b) Execution priority

• If several tasks to execute are waiting, it processes from the highest priority task program. If there are several tasks of same priority, they are processed by the order which is occurred.

• The task priority is applied to only each task.

• Please set the priority of task program considering program features, importance level and urgency demanding execution.

(c) Process delay time

The delay of task program processing occurs due to the following factors. Make sure to consider them when setting a task or creating a program.

• Task detection delay(please refer to the details of each task)
• Program execution delay due to the execution of preceding task program

(d) Correlation between scan program and task program in the initialization

Fixed Cycle task and internal contact point task does not operate while initialization task program is working.
Since scan program has a low priority, if a task occurs, it stops a scan program and executes a task program. Therefore, if tasks frequently occur during one scan, a scan time may increase unreasonably. A special attention should be paid when setting the conditions of task.

(e) Protection from task program of a currently running program

• If program execution continuity is lost by executing a higher priority program, you can partially protect the task program from being executed, for a problematic part. At the moment, a program can be protected by application function commands of ‘DI (task program operation disabled)’ or ‘EI(task program operation enabled)’

• Insert the application function command, ‘DI’ into the beginning position of a section to be protected and the application function command, ‘EI’ to the position to cancel it. Initialization task is not affected by the application function commands of ‘DI’ and ‘EI’.

Note
(1) If task program priority is duplicate set, a program works according to the creation order.

(4) Cycle Time Task Program

(a) Setting up cycle task

The window below shows the setting up of a fixed cycle task. In order to set up a fixed cycle task, enter task name, priority, and task number for task control, and select Fixed Cycle radio button in the Condition of Execution, and enter the cycle time of execution.

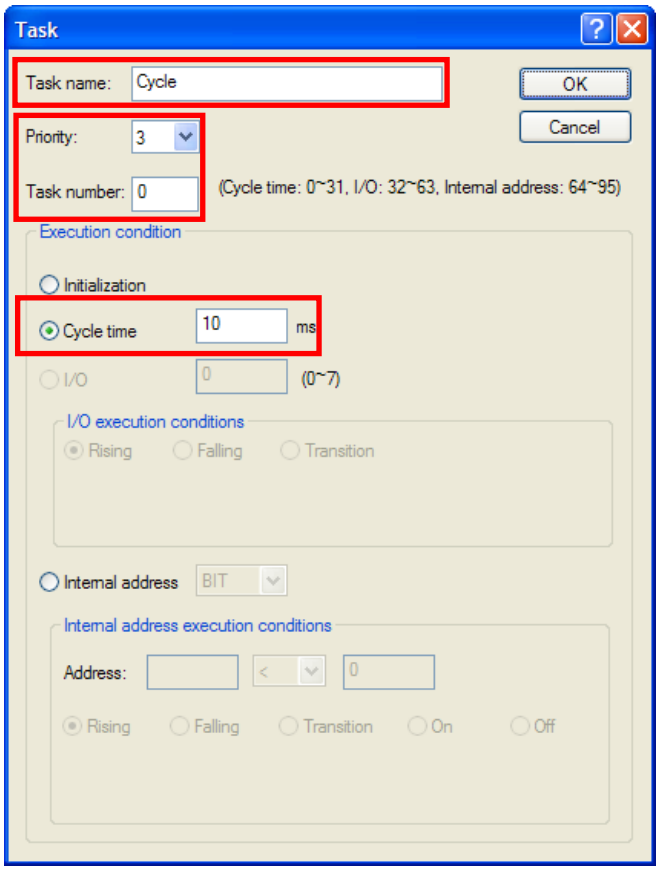

(b) Fixed cycle task processing

- Execute a fixed cycle task program at a pre-defined interval.

(c) Cautions for using a fixed cycle task program

- If a same task program is to be executed when a fixed cycle task program is in operation or waiting for execution, a new task is ignored.
- Only for a moment when the operation mode is RUN, a timer requiring executing a fixed cycle program is counted. Any interruption time is ignored.
- Remember that several fixed cycle task programs are to be executed simultaneously when setting the execution cycle of a fixed cycle task program.

If using 4 fixed cycle task programs of which cycle is 2, 4, 10 and 20 seconds respectively, it may have simultaneous execution of 4 programs every 20 seconds, probably causing a longer scan time.

⚠ Caution

(1) Note that if the total time length during which cycle time task are executed simultaneously is longer than the specified time length when several cycle time tasks occur simultaneously, a short cycle time task may not be successfully executed.
(2) The only cycle time task of which cycle is longer than scan cycle can be guaranteed for the fixed cycle.

(5) Internal device task

Bit and Word device can be set as execution condition for task.

(a) Task setting

In order to set up an internal device task, set task name, priority, and task number, Internal Device, the type of device and the condition of start up (Rising, falling, transition, on and off)

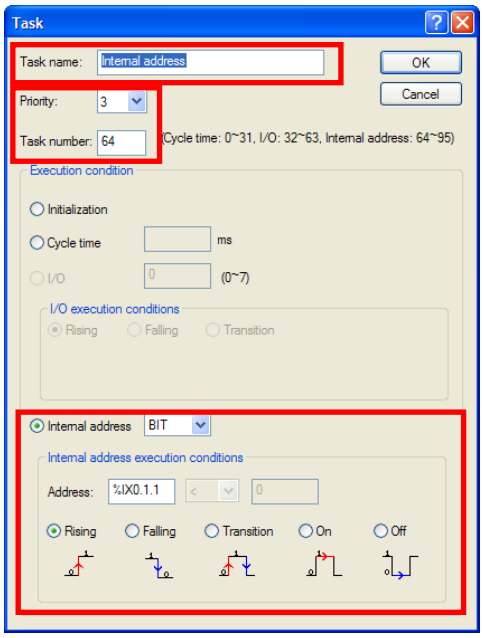

(b) Internal Device Task Handling

After the completion of scan program by CPU module, the internal device task program will be executed if starting condition is met according to the priority.

⚠ Caution

Internal address task program is executed at the moment when a scan program is completely executed. Therefore, although a scan program or task program generates the execution conditions of internal address task program, it is not immediately executed and instead, it is executed at the moment when a scan program is executed completely. Therefore, if the execution conditions of internal address task occur and disappear within a scan program, a task is not executed because it is not detected at the moment when the execution conditions are surveyed.

(6) Task processing in instantaneous interruption

When resuming operation due to a long instantaneous interruption, ignore any waiting task and tasks that occur during the interruption and process the only tasks from the moment of starting operation. If an interruption is within 20ms, a task that was waiting is executed once the interruption is removed. Any fixed cycle interrupt task that is duplicated during the interruption is ignored.

(7) Verification of task program

After creating a task program, verify it in accordance with the followings.

(a) Is the task set properly?

If a task occurs excessively or several tasks occur simultaneously in a scan, it may cause longer scan time or irregularity If a task setting can not be changed, check the max. scan time.

(b) Is the task priority well arranged?

A low priority task program may not be processed in a specified time due to a delay from a higher priority task program. The case may be, since the next task occurs with a preceding task delayed, it may cause task collision. The priority should be set in consideration of urgency of task, execution time and etc.

(c) Is the task program created as short as possible?

A longer execution time of task program may cause a longer scan time or irregularity. In addition, it may cause task program collision. Make sure to set the execution time as short as possible(especially, create a fixed cycle task program so that it could be executed within 10% of the shortest task cycle among several tasks.)

(d) Doesn't the program need to be protected against the highest priority task during the execution of program?

If a different task breaks into a task program execution, it completes a current task and then, operates from a task with the highest priority among waiting tasks. In case it is prohibited that a different task breaks into a scan program, it can be protected by using 'DI'/'EI' application functional commands. It may cause a trouble while processing a global parameter process commonly used with other program or a special or communication module.

(8) Program configuration and example of processing

First of all, register task and program as follows.

- Registering a task :

  T_SLOW (fixed cycle : = 10ms, Priority := 3)

  PROC_1 (internal contact : = M0, Priority := 5)

- Registering a program :

  Program --> P0 (scan program)

  Program --> P1 (operating by task T_SLOW)

  Program --> P2 (operating by task PROC_1)

Then, if the program execution time and the occurrence time of external interrupt signal are same,

- Execution time of each program: P0 = 21ms, P1 = 2ms and P2 = 7ms, respectively
- PROC_1 occurrence: During a scan program, the program is executed as follows.

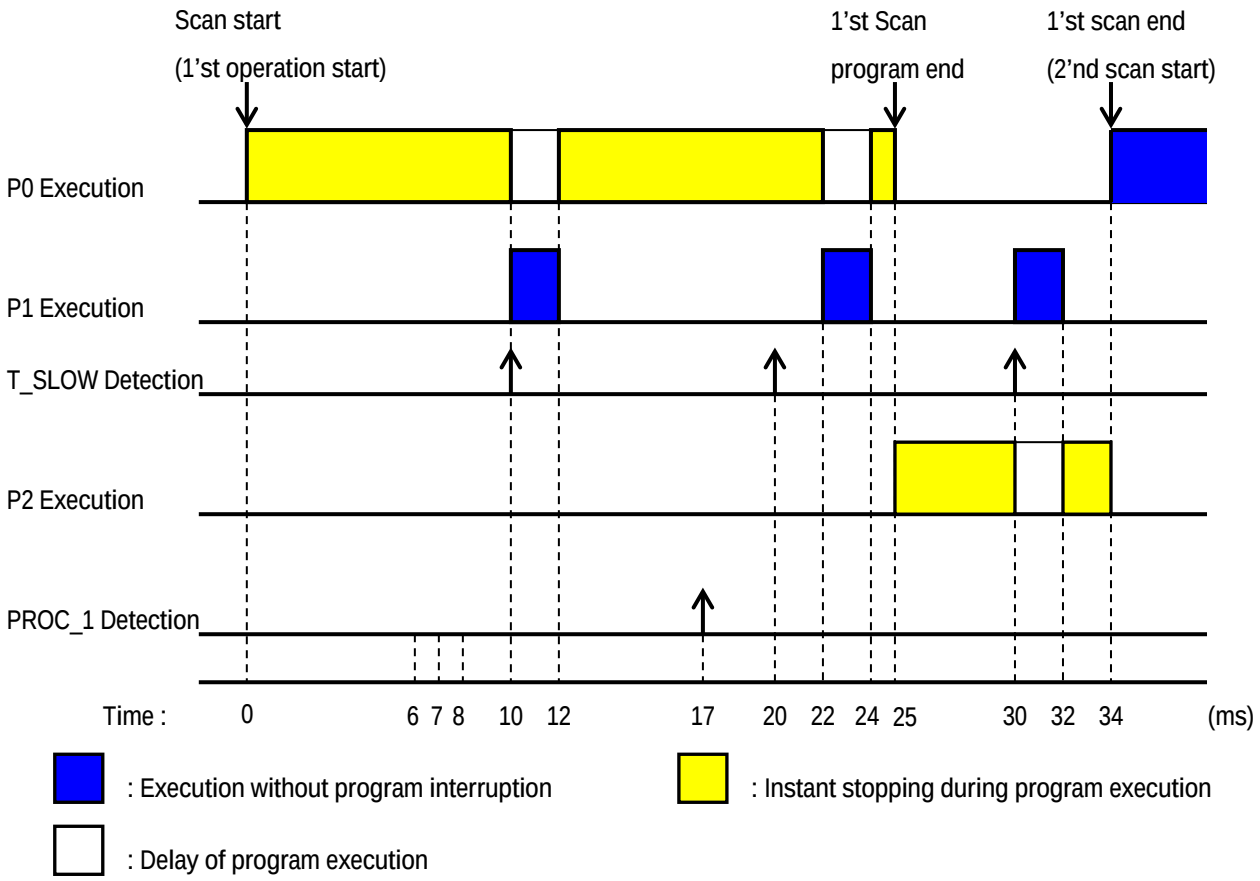

• Processing by time period

Time(ms)	Processing
0	Scan starts and the scan program P0 starts operation
0~10	Program P0 is executed
10~12	P0 stops due to the execution request for P1 and P1 is executed
17	Execution request for P2
12~20	P1 execution is complete and the suspended P0 resumes
20~24	P0 stops due to the execution request for P1 and P1 is executed
24~25	As P1 execution is complete, the suspended P0 is completely executed.
25	Check the execution request for P2 at the moment when scan program(P0) is complete and execute P2.
25~30	Execute program P2
30~32	P2 stops due to the execution request for P1 and P1 is executed
32~34	As P1 execution is complete, the suspended P2 is completely executed.
34	Start a new scan(P2 execution starts)

5.3 Operation Mode

5.3.1 Operation Mode

(1) Program Execution Mode
Program execution mode is the status of program execution by the CPU module. There are three modes; Run, Stop, and Debug. The operational status of each mode may vary by the status of the redundant operation.

It describes the operation process at each operation mode.

5.3.2 RUN mode

It executes a program operation normally.

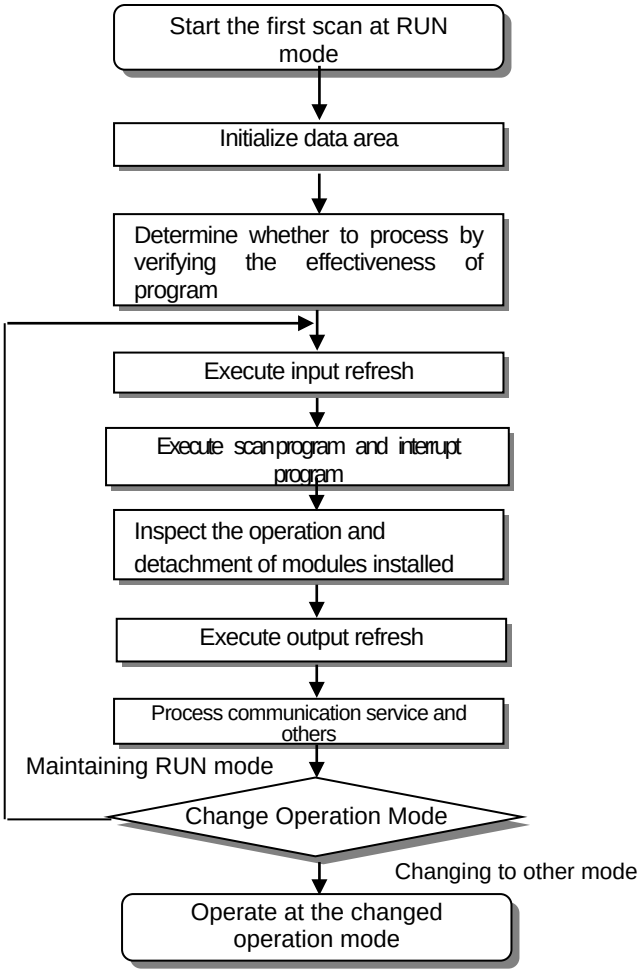

(1) Process of switching to Run mode
(a) When the PLC module is switched to the Run mode, the data area is initialized.
• According to the set up restart mode (cold, warm)
(b) Check the program validity to judge the possibility of execution.

(2) Operation process
Execute I/O refresh and program operation.

(a) Execute the interrupt program by detecting the operation conditions of interrupt program.

(b) Inspect the operation and detachment of modules installed.

(c) Process communication service and other internal operations.
(d) Synchronize the data between the master and standby CPUs.

5.3.3 Stop Mode

It stops with no program operation. Program can be transmitted through XG5000 only at remote STOP mode.

(1) Process in mode switching
When switched to the Stop mode, the output images are processed in two ways according to the basic parameter setting, as shown below.

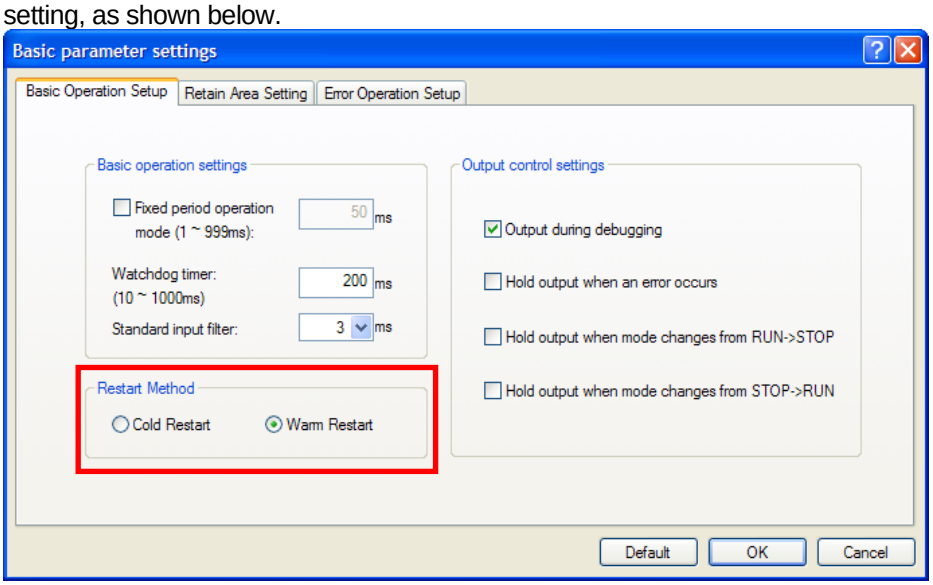

(a) When set up to maintain output in Run → Stop switching
When the mode is switched from Run to Stop operation, the output image area maintains the results of the last operation, and carries out output refreshing.
(b) When the output is released from maintenance at switching from Run to Stop
When the mode is switched from Run to Stop operation, the output image area is deleted and output refreshing is carried out.

(2) Operation process

(a) Execute I/O refresh.
(b) Inspect the operation and detachment of modules installed.
(c) Process communication service and other internal operations.

5.3.4 Debug Mode

As a mode to find any error from a program or trace an operation procedure, the mode can be changed only from STOP mode. In the mode, a user can verify a program while checking the program execution and data.

(1) Processing when a mode is changed
(a) At the beginning when the mode is changed, initialize the data area.
(b) Clear the output image area and execute input refresh.

(2) Operation process
(a) Execute I/O refresh.
(b) Debugging operation depending on the settings.
(c) After completing debugging operation to the end of the program, it executes output refresh.
(d) Inspect the operation and detachment of modules installed.
(e) Process communication service and other internal operations.

(3) Conditions of debug operation
There are four types of debug operation conditions and if reaching the break point, it is possible to set a different type of break point.

Operation condition	Description
Stepwise execution of operation(step over)	Upon an operation command, it executes a unit of operation and stops
Execution according to the designation of break point	Once a break point is designated in a program, it stops at the designated point
Execution according to the status of contact	If designating the contact area to monitor and the status(read, write, value), it stops when the designated operation occurs at the pre-defined contact.
Execution according to the designated scan frequency	Once designating the scan frequency to operation, it stops after operating as many as the scan frequency designated.

Caution

1. Debug mode is only available in single system.
   (1) To use debug mode, turn off the power of standby CPU and so that the system runs in single.
   (2) Convert to remote stop mode by mode key switch.
2. During debug mode, the user can't change mode by mode switch.

(4) Operation method
(a) Set the debug operation conditions at XG5000 and execute the operation.
(b) The interrupt program can be set by enabled/disabled at the unit of each interrupt.
(For the details of operation, please refer to Chapter 12 Debugging in the user's manual of XG5000)

5.3.5 Switching Operation Mode

(1) How to change an operation mode

An operation mode can be changed as follows.

(a) Mode change by the mode key of the CPU module
(b) Change by accessing the programming tool(XG5000) to a communication port of CPU
(c) Change of a different CPU module networked by XG5000 accessed to a communication port of CPU
(d) Change by using XG5000, HMI and computer link module, which are networked.
(e) Change by 'STOP' command while a program is operating.

(2) Type of Operation Mode

(a) Changing program execution mode with mode key
the method of changing operation mode using mode key is as follows.

Mode Key Position	Operation Mode
RUN	Local RUN
STOP	Local STOP
STOP → REM	Remote STOP
REM → RUN	Local RUN
RUN → REM	Remote RUN
REM → STOP	Local STOP

(b) Changing remote operation mode
Changing remote modes can be done with the operation mode switch at **'Remote Allowed: REM.'**

Mode Key Position	Mode change	Mode change by XG5000	Change by computer communication, etc.
REM	Remote STOP → Remote RUN	O	O(review)
	Remote STOP → DEBUG	O	X
	Remote RUN → Remote STOP	O	O
	Remote RUN → DEBUG	X	X
	DEBUG → Remote STOP	O	O
	DEBUG → Remote RUN	X	X

Caution

If changing the remote 'RUN' mode to 'RUN' mode by switch, the PLC is continuously operating without suspension.
Editing during RUN is possible in the 'RUN' mode by switch, but the mode change by XG5000 is restricted.
Make sure to change it only when the mode change is not remotely allowed.

5.4 Redundancy System Operation

5.4.1 Redundancy System Operation

(1) Redundant operation mode

A redundant system has data synchronization (SYNC) cable between CPUs. Each CPU module has a key switch for operation mode setting. The key switches look as shown below;

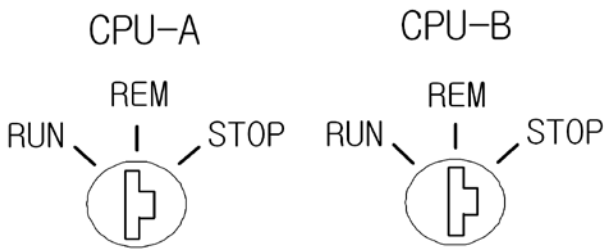

The operation statues of redundancy system can be classified as flows according to the installation, power supply, whether dada communication cable is connected between the CPUs, and the operation mode of each CPU.

Data sync. Cable between CPUs	Current operation status	Operation mode of CPU-A(B)	Operation mode of CPU-B(A)	Description
Connected	Single operation	RUN	STOP	Only CPU-A or CPU-B is operating in redundant operation mode. Same single CPU operation.
	Redundant operation	RUN	RUN	In redundant operation mode, CPU-A and CPU-B are set up as master and standby to perform redundant operation.
	Operation stopped	STOP	STOP	CPU-A and CPU-B are set up as master and standby to perform redundant operation, but the operation is stopped.
Not connected	Single operation	RUN/STOP	-	The operation is same as a single CPU operation.

⚠ Caution

When a standby CPU is added to a system operating with a single CPU (master) for redundant operation, the additional (standby) CPU must be installed in accordance with following procedures for uninterrupted operation of the PLC.

(1) With the power of the standby-side base OFF, construct a same module as the master-side base.
(2) Install the standby CPU in the CPU mounting slot. And set the A/B side switch in Standby CPU differently from Master CPU.
(3) Connect the CPUs with the data synchronization cable (Sync cable) and expansion cable.
(4) Confirm that the cables are correctly connected, turn the power of the standby base ON.
(5) Turn the operation mode switch to Local Run mode, so that the standby CPU is incorporated in the redundant operation.
(6) The standby CPU must be incorporated in the redundancy system operation to be able to run the same programs as those of the master CPU.
(Take care that, if the standby CPU has not been participating in the redundant operation, its program may differ from that of the master CPU.)

(2) Changing redundant operation mode

(a) According to the change of the CPU operation mode with mode key or by XG5000, the operation mode of the redundant system is changed as follows.

Current Status	Mode Change		Description
	Master Operation	Standby Operation	
Single Operation (RUN/STOP)	RUN → STOP	STOP status is maintained	When the master is changed to STOP state, the operation is stopped
	(No change: RUN)	→ RUN	Changing the standby to Run mode, the operation is changed to redundant operation.
Redundant Operation (RUN/RUN)	→ STOP	(No change: RUN)	If the master is changed to STOP, the standby becomes master in single operation status.
	(No change: RUN)	→ STOP	If the standby is changed to STOP, the master operates in single operation mode.
Operation Stop (STOP/STOP)	→ RUN	(No change: RUN)	The one, A or B, that enters RUN mode first gets the operation control and becomes the master in single operation status.

(3) Changing master in redundant operation

(a) Conditions for automatic master switching

1) Master CPU power supply failure
2) Master CPU stopped due to failure in program execution
3) Module removal/replacement error in the master CPU‘s basic base
4) Master CPU failure (CPU excluded)
5) Module on an expansion base is removed (isolated)
6) A system error in the master CPU (abnormal termination of CPU, scan watchdog error)

(a) Conditions for manual master switching

1) Master CPU’s mode key switch is set to Stop
2) Switched to Stop mode by the XG5000 connected with the master CPU
3) Execution of master switching instruction via XG5000 online access
4) Master/standby switching instruction (MST_CHG) is executed
5) Master/standby switching flag (_MASTER_CHG) is executed.

(c) Conditions that do not switch master

1) One of two power supply fails
2) Master fails when the standby has been failed
   a) If the same failure is identified, the operation is stopped.
   b) When en error is detected in the module in which error mask has been set up, the master is not switched.
3) When the standby CPU is not in Run operation state

5.4.2 Start-up of Redundant System

(1) Programming

(a) Conduct programming with XG5000.
(For details, see 'XG5000 User Manual'.)

(b) Transmit the program

Transmit the program with XG5000.

(2) Starting methods

Following methods are available for starting-up PLC;

(a) Starting with local key:
Download the program in remote mode (REM), set the front key to 'RUN'

(b) Starting with XG5000:
Set the front key on the CPU module to 'REM,' select RUN on the XG5000's online menu.

(c) Starting by power ON:
When the power is turned ON with the front key set to RUN or if the system was in Remote RUN mode before power OFF, the system can be started by power ON.

(d) Restarting with reset key:
Restarting with reset key has two methods; Reset and Overall Reset

1) Reset: activated by pressing the reset button on the front of the CPU module less than 3 seconds. 'RST' will appear on the indicator panel of the CPU. This is the same as power ON/OFF.

2) Overall Reset: activated by pressing the reset button on the CPU module for more than 3 seconds. 'RSTC' will appear on the indicator panel of the CPU. When the button is released, the system will be restarted in cold restart.

(3) Beginning the first operation

The procedures of system setting-up and starting-up for the first time operation of a redundant system are as follows.

(a) Prepare the program bocks suitable for the purpose, in as independent forms as possible
(b) In the redundancy parameters, set up the data synchronization area.
(c) When the programming is completed, compile it and carry out debugging.
(d) Using the XG5000 program tool, access CPU communication port and download the program
(e) Switch CPU-A or B to RUN mode using the mode switch key or XG5000.
(f) Switch the CPU which is not the master to RUN mode to set it to the standby CPU
(g) Stop the CPU-A to check normal operation of the standby CPU-B.

(4) Participating in operation

When the standby CPU participates in the operation while the master CPU is in operation, the standby CPU is synchronized with the master CPU in following procedures.

(a) CPU initialization
(b) Checking the redundant components
(c) Transfer non-variable data to the master
(d) Transfer variable data from the master
(e) Check synchronization with the master CPU
(f) Participate in the operation at the same time as the master CPU

Note

(1) For the redundant operation mode setting and parameter setting, see '6.7 Redundant System Operation Mode'
(2) (a), (b), and (c) are processed separately with delay time less than approximately 50ms at every scan of the master.
(3) (d), (e), and (f) must be processed within one scan of the master, with the delay time not exceeding 50ms.
(If the volume of the variables used exceeds the standard variable value, the delay time may exceed 50ms. For further information, see '5.1.4 Scan Time')

(5) Procedures of participating in standby operation
Detail procedures of participating in standby operation are as follows.

(a) Power ON
1) Check that the master is in operation
2) Standby entering mode
3) CPU self diagnosis
4) Transfer program from the master (store in RAM and memory module)

(b) Checking redundant system components
1) Check switching I/O access
2) Receive and check switching I/O module information from the master
3) Scan the redundant I/O module information installed in the standby-side
4) Compare with the I/O parameters

(c)Transfer non-variable data from the master
1) Receive the flag from the master (executed by being divided into multiple scans as necessary)
2) After confirming that the flag status has not been changed, proceed to (4)

(d) Receive the variable data from the maser
1) User data area and a part of system buffer

(e) Check synchronicity with the master
1) All the operation data in the CPU is synchronized

(f) Participate in the operation at the same time as the master
1) Conduct redundant operation from the input refreshing

(6) Operation according to starting status
(a) Normal start-up
The master CPU module checks system configuration at power ON. In case of late power on of the expansion base, the base being check appears on the front indicator panel and wait for power on.
In 'STOP' mode, wait for 10 seconds and switched to Stop mode.
1) The first operation after program modification begins in cold restart.
2) When the system had been shut-down normally, the restarting will be performed according to the set-up parameters, including mode key, XG5000, power OFF and reset.
3) To cold-restart a system set up in warm restart mode, use reset key or the Overall Reset function of the XG5000.
4) If the system was stopped due to an error in operation, the restarting method will be determined by the type and release method of the error (see 'Chapter 13. Program Troubleshooting').

(b) When I/O skip has been set up
1) Since the I/O module set up with skip is excluded from the operation in the restarting, failure check, etc., are not conducted, and included in the operation normally when the skip is released during operation. For detail information, see '9.2 I/O Skip' and '9.3 Module Replacement during Operation.'

(c) When failure mask has been set up

1) Since the modules set up with failure mask are included in the operation in the restarting, failure check, etc., are conducted. However, even if module type disagreement error occurs in the initial phase of the restart, the operation is continued. For further information, see '9.1 Failure Mask.'

2) When the entire bases are set up with mask, if the power of the respective base is off, the CPU waits for power on in waiting mode.

5.5 Memory

The CPU module contains two types of memory that can be used by a user. One is the program memory to save a user program created to construct a system and the other one is the data memory to provide a device area to save the data during operation.

5.5.1 Program memory

The storage capacity and data area type of the program memory are as follows.

Item(area)		Capacity	Remark
Whole memory area		25MB	Whole memory capacity
	Program Memory	3MB	Include Upload
	System Memory	4MB	System data and parameter area
	Data Memory	2MB	Device memory, Flag, System area
	Flash Memory	16MB	For flash operation mode

5.5.2 Data memory

The storage capacity and data area type of the data memory are as follows.

Item(area)		Capacity
Whole data memory area		2MB
System area : • I/O data table • Forcible I/O table • Reserved area		770KB
Flag area	System flag	4KB
	Analogue image flag	32KB
	PID flag	16KB
	High speed link flag	22KB
	P2P flag	42KB
Input image area(%I)		16KB
Output image area(%Q)		16KB
R area(%R)		128KB
Direct parameter area(%M)		256KB
Symbolic parameter area(max.)		512KB
Stack area		256KB

5.5.3 Data retain area setting

If the data necessary for operation or the data that occur during operation are to be kept for use even when the PLC stops and resumes operation, the default(auto.) parameter retain is to be used. Alternatively, a part of the M area device may be used as the retain area by parameter setting.

The following table summarizes the features of retain settable device.

Device	Retain setting	Feature
Auto variable	User-defined	Retain settable if adding a parameter to the auto parameter area
M	User-defined	Retain settable into internal contact area by parameter
K(PID)	X	Contact that is kept as contact status in case of interrupt
F	X	System flag area
U	Not retained	Analogue data register (retain not settable)
L	Not retained (V1.1 or above)	High speed link/P2P service status contact of communication module(retained)
N	X	P2P service address area of communication module(retained)
R	X	Exclusive flash memory area(retained)
W	X	Exclusive flash memory area(retained)

Note

(1) K, L, N and R devices are basically retained.
(2) K, L and N devices can be deleted in the memory deletion window of PLC deletion, an online menu of XG5000.
(3) For details of directions, please refer to the ‘Online’ in the user’s manual of XG5000.

(1) Data initialization by restart mode

There are 3 restart mode related parameters; default, initialization and retain parameter and the initialization methods of each parameter are as follows in the restart mode.

Mode / Parameter	Cold	Warm
Default	Initializing as '0'	Initializing as '0'
Retain	Initializing as '0'	Maintaining the previous value
Initialization	Initializing as a user-defined value	Initializing as a user-defined value
Retain & initialization	Initializing as a user-defined value	Maintaining the previous value

(2) Operation in the data retain area

Retain data can be deleted as follows.

- D.CLR switch of the CPU module
- RESET switch of the CPU module (3 seconds and longer: Overall Reset)
- RESET by XG5000 (Overall Reset)
- Deleting memory at STOP mode by XG5000
- Writing by a program (recommending the initialization program)
- Writing '0' FILL and etc at XG5000 monitor mode

D.CLR clear does not work at RUN mode. To do it, after make sure to change to STOP mode. In addition, the default area can be also initialized when clearing by D.CLR switch.
When instantaneously operating D.CLR, the only retain area is deleted. If maintaining D.CLR for 3 seconds, 6 LEDs blink and at the moment, if the switch returns, even R area data are also deleted.

For the maintenance or reset(clear) of the retain area data according to the PLC operation, refer to the following table.

Item	Retain	M area retain	R area
Reset	Maintaining the previous value	Maintaining the previous value	Maintaining the previous value
Over all reset	Initializing as '0'	Initializing as '0'	Maintaining the previous value
DCLR	Initializing as '0'	Initializing as '0'	Maintaining the previous value
DCLR (3sec)	Initializing as '0'	Initializing as '0'	Initializing as '0'
STOP→RUN	Maintaining the previous value	Maintaining the previous value	Maintaining the previous value

When STOP->RUN, in case it is set as Cold Restart, Retain Auto variable is initialized
In case it is set as Warm Restart, Retain Auto variable is maintained.

Note

The terms and definitions for 3 types of variables are as follows.
(1) Default variable: a variable not set to maintain the initial/previous value
(2) Initialization(INIT) variable: a variable set to maintain the initial value
(3) Retain variable: a variable set to maintain the previous value

(3) Data initialization

Every device memory is cleared up as '0' at the status of memory deletion. The data value may be assigned initially depending on a system and at the moment, the initialization task should be used.

Chapter 6 CPU Module Functions

6.1 Self-diagnosis Function

(1) The self-diagnostic is the function that the CPU module diagnoses any trouble of the PLC system.
(2) It detects any trouble when turning on the PLC system or any trouble is found during the operation, avoid the system from malfunctioning and taking preventive measures.

6.1.1 Scan watchdog timer

WDT(Watchdog Timer) is the function to detect any program runaway resulting from abnormal hardware/software of PLC CPU module.

(1) WDT is a timer used to detect an operation delay from abnormal user program. It can be set in the basic parameter of XG5000.

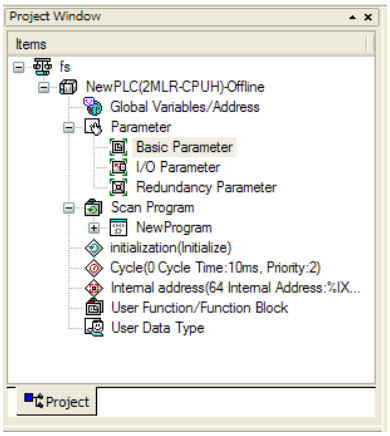

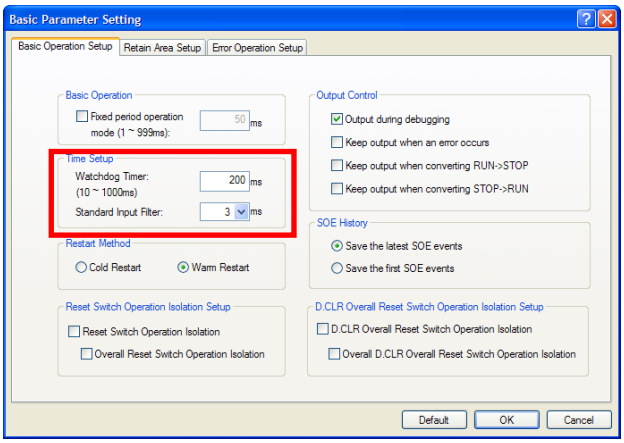

(2) WDT monitors any scan overtime during operation and if it detects any overtime delay, it immediately suspends the PLC operation and turns off every output.

(3) If it is expected that programming a specific part(using FOR ~ NEXT command, CALL command and etc) may have an overtime delay of scan watchdog timer while executing a user program, you can clear the timer by using 'WDT' command. The 'WDT' command restarts from 0 by initializing the overtime delay of scan watchdog time(for the details of WDT command, please refer to the chapter about commands in the manual).

(4) To release a watchdog error, turn it on again, operate manual reset switch or change the mode to STOP mode.

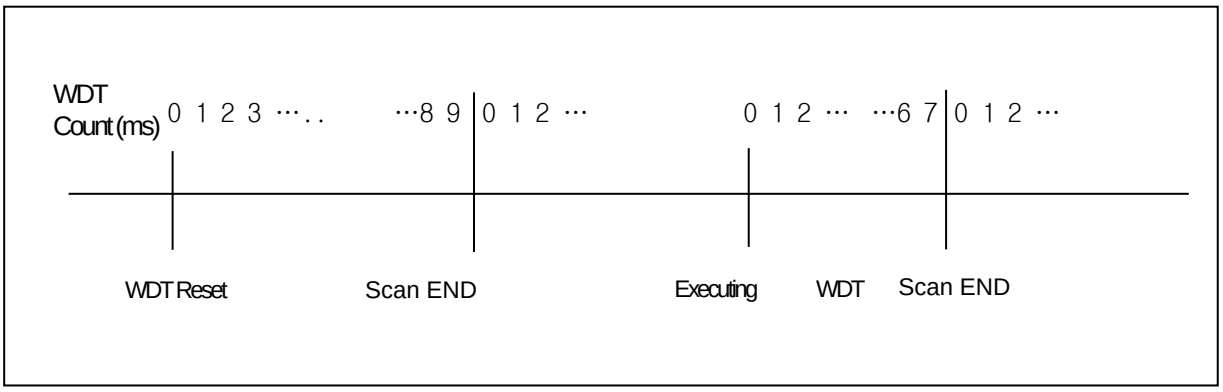

⚠ Caution

(1) The setting range of the watchdog timer is 1 ~ 999ms(1ms step), and the initial value is 200ms.
(2) If the cycle is set too short, scan watchdog time error may occur if the scan time is elongated by communication traffic overload, etc. It is recommended to set the cycle sufficiently longer that _SCAN_MAX

6.1.2 I/O Module Check Function

This function checks the I/O module when entering Run mode or during PLC operation

(1) When entering Run mode, check if a module disagrees with the parameter setting or in failure (E030)
(2) Check if the I/O module is isolated or failed during operation (E031)

If an abnormality is detected, the error indicator lamp (ERR LED) turns on, error number is indicated on the status indicator, and the CPU stops operation.

6.1.3 Battery level check

The function monitors battery level and detects, if any, low battery level, warning a user of it. At the moment, the warning lamp (BAT) on the front of the CPU module is On. For the details of measures, please refer to “4.3.3 Battery Life”.

6.1.4 Saving error log

The CPU module logs, if any, errors so that a user can easily analyze the error and take corrective measures.

It saves each error code to the flag area.

Note
The results of self-diagnostic check are logged in the flag area. For the details of self-diagnostic and troubleshooting against errors, please refer to 14.5 Error Codes List during CPU Operation of Chapter 13. Troubleshooting.

6.1.5 Troubleshooting

(1) Types of trouble

A trouble occurs mainly by the breakage of PLC, system configuration error and abnormal operation results. ‘Trouble’ can be categorized by ‘heavy fault mode’ at which the system stops for the purpose of the system safety and ‘light fault mode’ at which the system warns a user of a trouble and resumes operation.

The PLC system may have a trouble by the following causes.

- Trouble in the PLC hardware
- System configuration error
- Operation error while a user program is operating
- Error detection resulting from a fault external device

(2) Operation mode when a trouble is found

If a trouble is detected, the PLC system logs the trouble message and stops or resumes operation depending on a trouble mode.

(a) Trouble in the PLC hardware

If heavy fault that the PLC may not properly work, such as CPU module, power module and others occurs, the system stops. However, the system resumes operation in case of light fault such as abnormal battery.

(b) System configuration error

It occurs when the hardware structure of PLC is not same as defined in the software. At the moment, the system stops. This occurs at module type disagreement error, module isolated error, or when the I/O mounted on the PLC differs from the I/O set up in the XG5000.

(c) Operation error while a user program is operating

In case of numerical operation error as a trouble occurring while a user program is operating, error flag(_ERR) and error latch flag(_LER) are displayed and the system resumes operation. If an operation time exceeds the overtime delay limit or the built-in I/O module is not controlled, the system stops.

> **Note**
>
> Error latch flag is maintained as long during a scan program if an error occurs in scan program. Every time a command is executed, error flag is cleared and set just after a command generating an error is executed.

(d) Error detection resulting from a fault external device

It detects a fault of external device; in case of heavy fault, the system stops while it just displays a fault of the device and keeps operating in case of light fault.

> **Note**
>
> (1) If a fault occurs, the fault number is saved into the flag(_ANNUM_ER).
> (2) If light fault is detected, the fault number is saved into the flag(_ANNUM_WAR).
> (3) For further information about the flags, please refer to Appendix 1. Flags List.

(5) Error detection in redundant operation

Nonconformity of redundancy parameter is detected by the redundancy parameter error flag (_DUPL_PRM_ER), and data communication error during redundant operation is detected by the redundancy synchronization error flag (_DUPL_SYNC_ERR). If an error occurs, the system stops. In addition, the status information on the current redundancy system configuration is provided with the redundancy Configuration warning error flag (_REDUN_WAR). If this error is detected, the system displays the status but continues operation.

6.2 Clock Function

The CPU module contains a clock element (RTC), which operates by the backup battery even in case of power-off or instantaneous interruption.
By using the clock data of RTC, the time control for the operation or trouble logs of the system is available. The present time of RTC is updated to the clock-related F device per scan.

(1) Read from XG5000/Setting

Click ‘PLC RTC’ in the online mode, ‘PLC Information.’

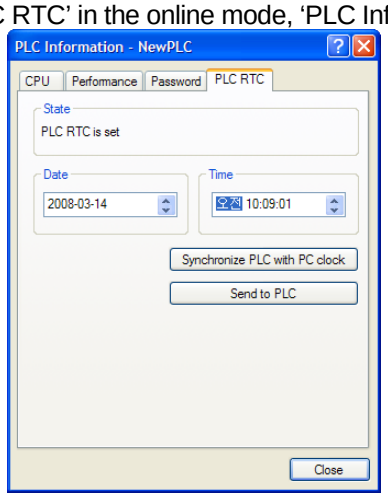

It displays the time from the PLC RTC. If it displays the present time incorrectly, a user can fix it up by transferring the right time after manually setting the time or performing “Synchronize PLC with PC clock” method to transmit the time of PC clock connected to the PLC.

(2) Clock reading by Flag

It can be monitored by flags as follows.

Flags	Examples	Size	F area	Description
_RTC_TIME[0]	16#08	BYTE	%FB12	Current time [year, last two digits]
_RTC_TIME[1]	16#02	BYTE	%FB13	Current time [Month]
_RTC_TIME[2]	16#23	BYTE	%FB14	Current time [Date]
_RTC_TIME[3]	16#14	BYTE	%FB15	Current time [Hour]
_RTC_TIME[4]	16#16	BYTE	%FB16	Current time [Minute]
_RTC_TIME[5]	16#17	BYTE	%FB17	Current time [Second]
_RTC_TIME[6]	16#06	BYTE	%FB18	Current time[day]
_RTC_TIME[7]	16#20	BYTE	%FB19	Current time [hundred year]

(3) Clock data modified by program

A user also can set the value of clock by using a program.
It is used when setting the time manually by external digital switches or creating a system to calibrate a clock periodically on network.

Input a value into the below flag area and use the ‘_RTC_TIME_USER’ function block. The time data is updated in scan END.

Flags	Examples	Size	F area	Description
_RTC_TIME_USER[0]	16#08	BYTE	%FB3860	Current time [year, last two digits]
_RTC_TIME_USER [1]	16#02	BYTE	%FB3861	Current time [Month]
_RTC_TIME_USER [2]	16#23	BYTE	%FB3862	Current time [Date]
_RTC_TIME_USER [3]	16#14	BYTE	%FB3863	Current time [Hour]
_RTC_TIME_USER [4]	16#16	BYTE	%FB3864	Current time [Minute]
_RTC_TIME_USER [5]	16#17	BYTE	%FB3865	Current time [Second]
_RTC_TIME_USER [6]	16#06	BYTE	%FB3866	Current time[day]
_RTC_TIME_USER [7]	16#20	BYTE	%FB3867	Current time [hundred year]

Alternatively, instead of using function blocks, it is also possible to enter clock data into the above area and turn on ‘_RTC_WR’ in order to input the time.

(a) No input is allowed unless time data is entered in a right format
(However, even if the day of the week data is not correct, it is set without error detected)

(b) After writing the clock data, check whether it is rightly set by monitoring Reading Clock device.

(4) How to express the day of the week

Number	0	1	2	3	4	5	6
Day	Sunday	Monday	Tuesday	Wednesday	Thursday	Friday	Saturday

(5) Time error

The error of RTC varies depending on the operating temperature. The following table shows the time error for a day.

Operating temp.	Max. error (sec/date)	Ordinary (sec/date)
0 °C	- 4.67 ~ 1.38	-1.46
25 °C	- 1.64 ~ 2.42	0.43
55 °C	- 5.79 ~ 0.78	-2.29

Caution

(1) Initially, RTC may not have any clock data.
(2) When using the CPU module, first make sure to set the accurate clock data.
(3) If any data out of the clock data range is written into RTC, it does not work properly.
i.e.) 14M 32D 25H
(4) RTC may stop or have an error due to abnormal battery and other causes. The error is released if a new clock data is written.
(5) For further information of how to modify the clock data, please refer to the description of XGI commands
(6) In the sybchronization of the master and backu CPUs, time difference may occur between the master and backup.

6.3 Remote Function

The operation mode of the CPU can be changed by communication, in addition to the key switch on the module. For remote operation, set the key switch of the CPU module to REM (remote) position>

(1) Types of remote operation

(a) Operation by connecting to XG5000 via USB or RS-232C port installed on the CPU module
(b) Operate by connecting XG5000 via the USB port on the expansion drive module
(c) Other PLC networked on the PLC can be controlled with the CPU module connected to XG5000.
(d) The PLC operation is controlled by HMI software and other applications through the dedicated communication.

(2) Remote RUN/STOP

(a) Remote RUN/STOP is the function to execute RUN/STOP remotely with the dip switch of the CPU module set to REMOTE and the RUN/STOP switch set to STOP.
(b) It is a very convenient function when the CPU module is located in a place hard to control or in case the CPU module is to run/stop from the outside.

(3) DEBUG

(a) DEBUG is the function to control DEBUG with the dip switch of the CPU module set to REMOTE and RUN/STOP switch set to STOP.
(b) It is a very convenient function when checking program execution status or data in the debugging operation of the system.

(4) Remote Reset

(a) Remote reset is the function to reset the CPU module remotely in case an error occurs in a place not to directly control the CPU module.
(b) Like the switch control, it supports ‘Reset’ and ‘Overall Reset.’

Note
For the further information about remote functions, please refer to the ‘Online’ part in the user’s manual of XG5000.

(5) Flash memory operation mode

(a) What is the flash operation mode? It means that the system operates by the backup program in flash in case the program in ram is damaged. If selecting “Flash Memory Operation Mode”, it starts operation after program in flash moves to the program memory of the CPU module when the operation mode is changed from other mode to RUN mode or when restarting.

(b) Flash Memory Operation Mode Setting

Check the operation mode setting by using 'Online → Set Flash Memory … → 'Enable flash memory run mode' and click 'OK. '

Once pressing it, it shows a dialogue box stating "Saving flash memory program …" and copies the program from user program area to flash.

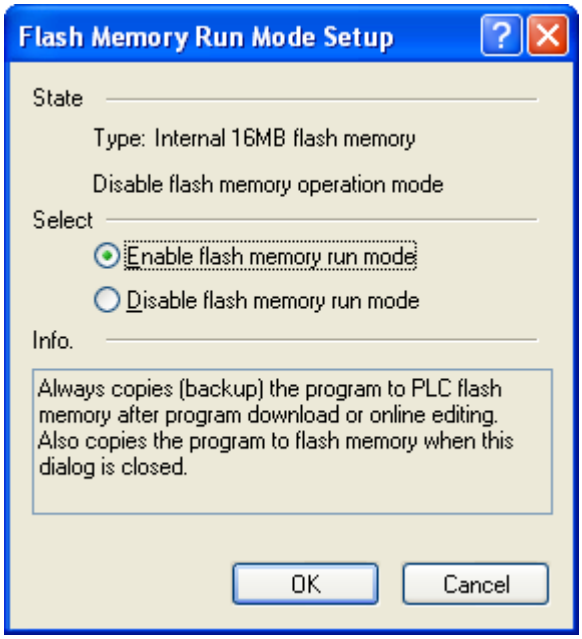

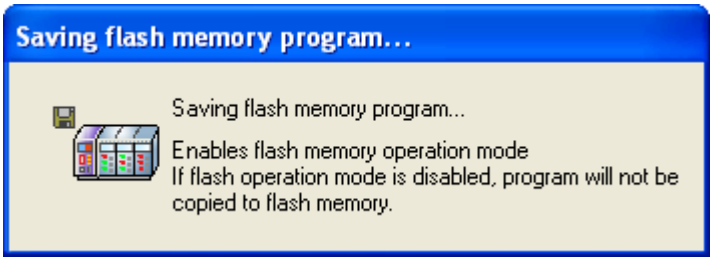

⚠ Caution

(1) The default is 'Flash Memory Operation Mode deselected'.

(2) Flash memory operation mode is maintained as 'On' as long as it is not 'Off' by XG5000.

(3) Flash memory operation mode can be changed, irrespective of RUN/STOP mode.

(4) Flash memory operation mode can be set by the online menu of XG5000 when executing flash 'operation mode setting' after program debugging is complete with the flash memory operation mode off.

(5) If modifying during RUN with 'flash memory operation mode' set, the changed program may be applied only when it restarts as long as the program is successfully written in flash memory. Note that if the PLC restarts before a program is saved into flash memory, a program that is saved in advance, instead of the changed program, works.

(6) If flash memory operation mode is changed from 'disabled' to 'enable', flash memory operation mode is applied as long as the flash memory writing is complete. In case the PLC restarts before completing program writing, "Flash memory operation mode" is released.

(c) Flash memory operation method

If restarting the PLC system or changing its operation mode to RUN, it works as follows depending on the flash operation mode setting.

Flash memory operation mode setting	Description
On	If program memory data are damaged because flash memory and program memory are different or battery voltage is low, it downloads the program saved in flash memory to program memory.
Off	CPU understands that flash memory does not have any program and operates by the program saved in RAM.

6.4 Forced On/Off Function of I/O

The forcible I/O function is used to forcibly turn on or off I/O area, irrespective of program execution results.

6.4.1 Force I/O Setting

(1) Click [Online]-[Force I/O] on XG5000.

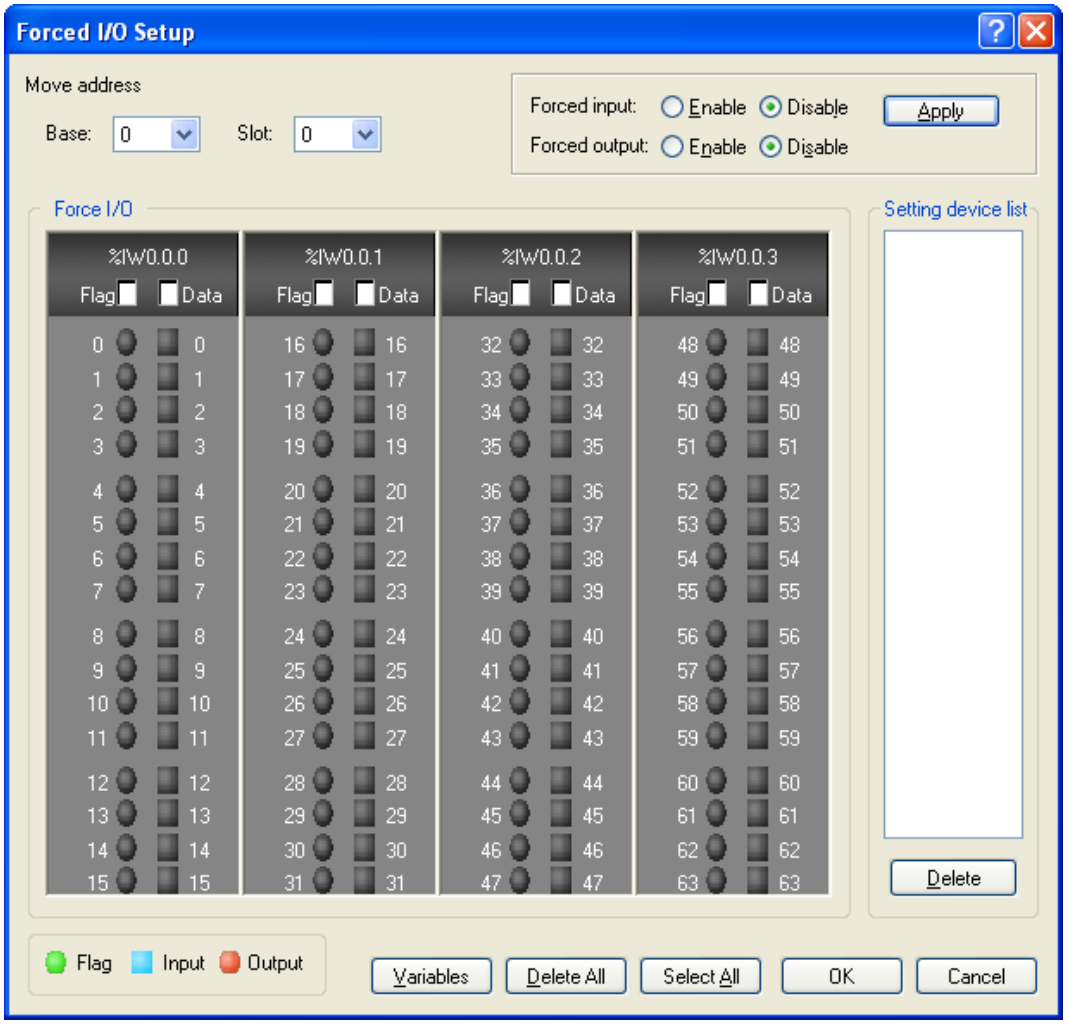

(a) To set forcible I/O, select the flag of a contact to set and the data checkbox
(b) To set “1”, select the flag and data of a bit and then, select a flag.
(c) To set “0”, select a flag only, not the data corresponding to the bit.
(d) If selecting ‘forcible input or output enabled’, the setting is applied and it works accordingly.

For further directions, please refer to the user’s manual of XG5000.

⚠ Caution

(1) Forcible I/O setting is available only in local I/O module.
(2) It can not be set in remote I/O module(smart I/O module).
(3) If forcible I/O is set, “CHK LED” is On.
(4) The forcible I/O set by a user is maintained even though a new program is downloaded.

6.4.2 The point of time of method of forced On/Off process

(1) Forcible input

'Input' replaces the data of a contact set by Forcible On/Off from the data read from input module at the time of input refresh with the forcibly set data and updates input image area. Therefore, a user program can execute operation with actual input data and forcibly set data.

(2) Forcible output

'Output' replaces the data of a contact set by Forcible On/Off from the output image area data containing operation result at the time of output refresh with the forcibly set data and outputs to an output module after completing user program operation. Unlike input, the data in output image area is not changed by forcible On/Off setting.

⚠ Caution

Cautions for using forcible I/O

(1) It works from the time when input/output are set to 'enable/disable' respectively after setting forcible data.

(2) Forcible input can be set even though actual I/O module is not installed.

(3) The previously set On/Off setting data are kept in the CPU module, despite of power off → on, operation mode change, program download or manipulation by reset key. However, it is deleted if overall reset is executed.

(4) Forcible I/O data are not deleted even in STOP mode.

(5) To set new data from the first, release every setting of I/O by using 'overall reset'.

6.5 Operation history saving function

There are four types of operation logs; Error log, Mode change log, shut down log and System log.
It saves the time, frequency and operation of each event into memory and a user can conveniently monitor them through XG5000. Operation log is saved within the PLC unless it is deleted by XG5000.

6.5.1 Error history

It saves error log that occurs during operation.
(1) Saving error code, date, time and error details.
(2) Saving logs up to 2,048
(3) Automatically released if memory backup is failed due to low battery level and etc

6.5.2 Mode change history

It saves the change mode information and time if an operation mode is changed.
(1) Saving the date, time and mode change information.
(2) Saving up to 1,024.

6.5.3 Shut down history

Saving power On/Off data with it's time data.
(1) Saving On/Off data, date and time.
(2) Saving up to 1,024.
(3) History of master and standby power is indicated respectively.

6.5.4 System history

It saves the operation log of system that occurs during operation.
(1) Saving the date, time and operation changes
(2) XG5000 operation data, key switch change information
(3) Instantaneous interruption data and network operation
(4) Saving up to 2,048

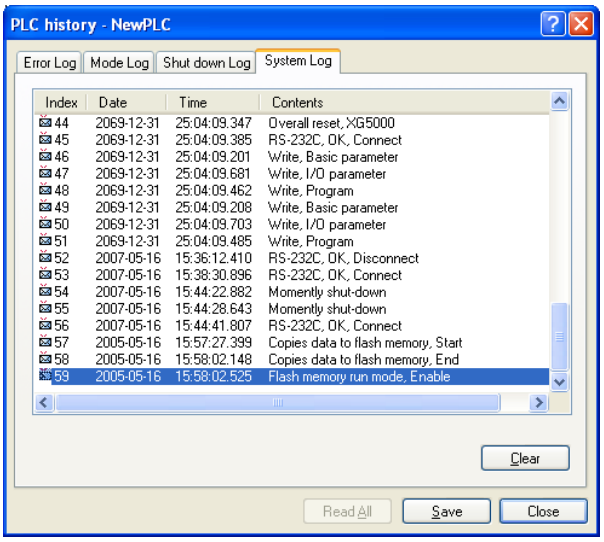

Note

(1) The saved data are not deleted before it is deleted by selecting a menu in XG5000.
(2) If executing Read All in case logs are more than 100, the previous logs are displayed.

6.6 External device failure diagnosis function

It is the flag that a user detects a fault of external device so that the suspension/warning of a system could be easily realized. If using the flag, it can display a fault of external device, instead of creating a complex program and monitor a fault position without XG5000 and source program.

(1) Detection/classification of external device fault

(a) The fault of external device is detected by a user program and it can be divided into heavy fault(error) that requires stopping the PLC operation and light fault(warning) that only displays fault status while it keeps operating.
(b) Heavy fault uses '_ANC_ERR' flag and light fault uses '_ANC_WB' flag.

(2) If a heavy fault of external device is detected

(a) If a heavy fault of external device is detected in a user program, it writes the value according to error type defined in a system flag, '_ANC_ERR' by a user. Then, with _CHK_ANC_ERR flag On, it checks at the completion of a scan program. At the moment, if a fault is displayed, it is displayed in '_ANNUN_ER' of '_CNF_ER', which is the representative error flag. Then, the PLC turns off every output module(depending on the output control setting of basic parameter) and it has the same error status with PLC fault detection. At the moment, P.S LED and CHK LED are On, besides ERR LED.
(b) In case of a fault, a user can check the cause by using XG5000 and alternatively, check it by monitoring '_ANC_ERR' flag.
(c) To turn off ERR LED, P.S LED and CHK LED, which are On by heavy fault error flag of external device, it is necessary to reset the PLC or turn it off and on again.

■ Example

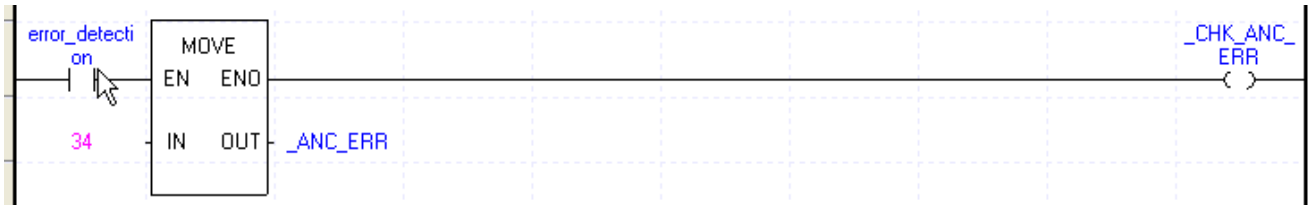

(3) If a light fault of external device is detected

(a) If a light fault of external device is detected in a user program, it writes the value according to warning type defined in '_ANC_WAR' by a user. Then, with _CHK_ANC_WAR On, it checks at the completion of a scan program. At the moment, if a warning is displayed, '_ANNUN_WAR' of '_CNF_WAR', which is the representative error flag of system is On. At the moment, P.S LED and CHK LED are On.
(b) If a warning occurs, a user can check the causes by using XG5000. Alternatively, a user can check the causes by directly monitoring '_ANC_WAR' flag.
(c) With _CHK_ANC_WAR OFF, P.S LED and CHK LED are off and the display, '_ANNUN_WAR' of '_CNF_WAR' is reset.

■ Example

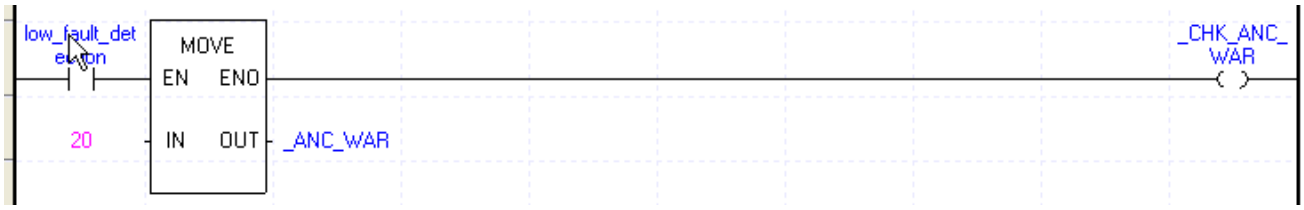

6.7 Redundancy system operation setting

For redundant system operation, redundancy parameters have to be set up.
Redundanct parameter configurationis classified into the operation mode setting and data synchronization area setting.
The default setting has no data synchronization area. Be careful that, if the data synchronization area is not set up, the data of the master CPU is not synchronized to the standby CPU.

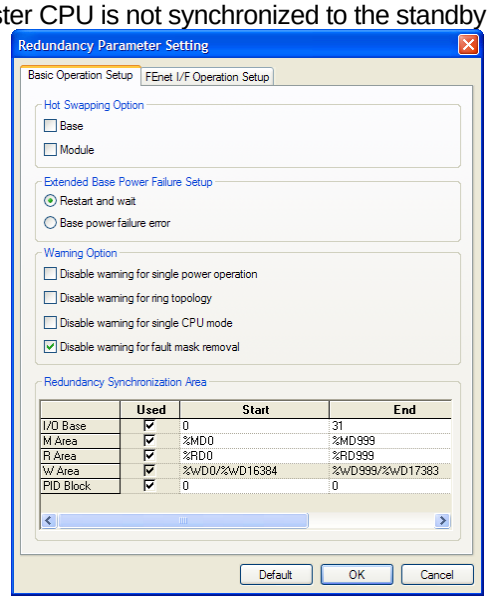

Different from other parameters, the dredundancy parameters can be written during running.

However, the redundancy parameters cannot be automatically dpwnloaded during running writing.
From the XG5000 online writing, select the redundancy parameters only and download them.

6.7.1 Operation mode setting

(1) Single CPU operation mode

If the system is operation with master CPU only, without standby, redundancy system configuration warning occurs.
To configure XGR system with a single CPU, select the 'Disable the warning message for Single CPU Mode' check box to prevent the warning display.

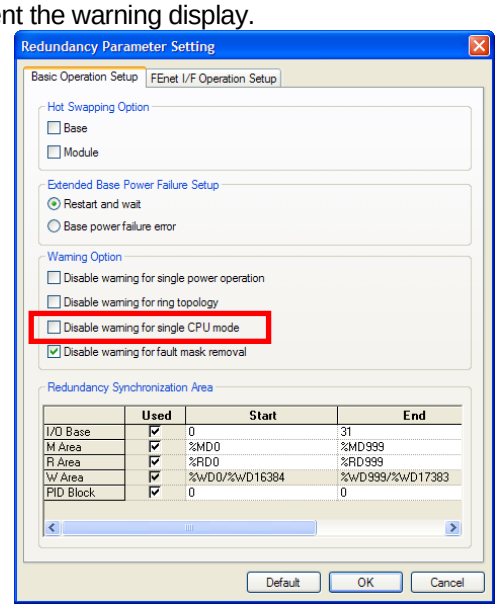

⚠ Caution
It is recommended to configure the XGR system in redundant CPU system. If the redundant system is configured with single CPU, the system stops if the CPU module fails. To prevent system interruption, set up the system in redundant CPU configuration

(2) Error handling in power cut-off of expansion base

In a redundant XGR system configured wuth multiple extensin bases for enhanced system reliability and diversity, in case of detach (powr off) of expansion base(s), the user can select whether to consider it as error or CPU restarts the system and watis until exension base in problem paricipate in operation again.

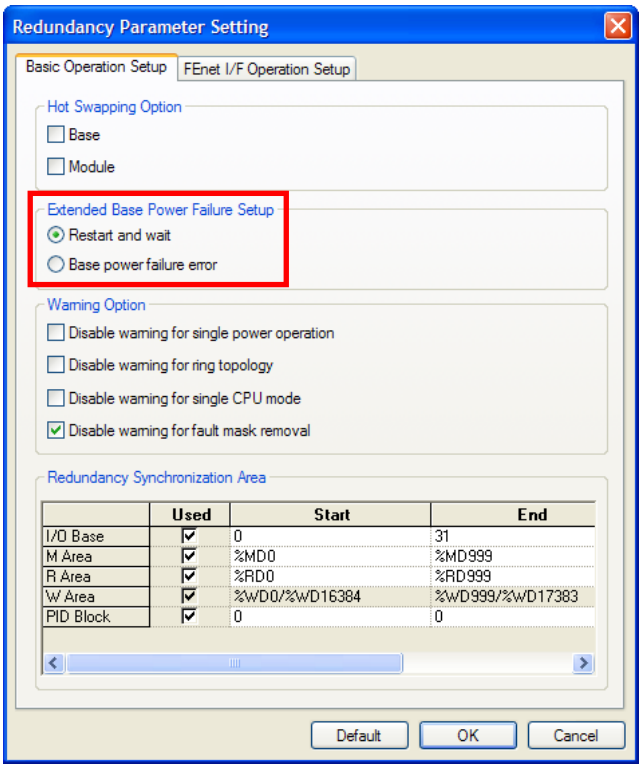

a) If the check box “Restart and wait” is selected;
As the default setting, in case of a problem in an expansion base, the system is restarted and the CPU module waits until the base in failure is normalized. The base in failure is indicated with “Ebxx” in the CPU indicator panel.

When the failed base is restarted normally and returns to the system, the CPU module restarts in the same manner as the initial start-up and carry out normal operation.

b) If the check box “Extended Base Detach Error ” is selected;
In case of failure of an expansion base, other modules operate in accordance with the error process setting in the basic parameter settings.
If the basic parameter was set to maintain output under error occurrence, other modules maintain the last output.

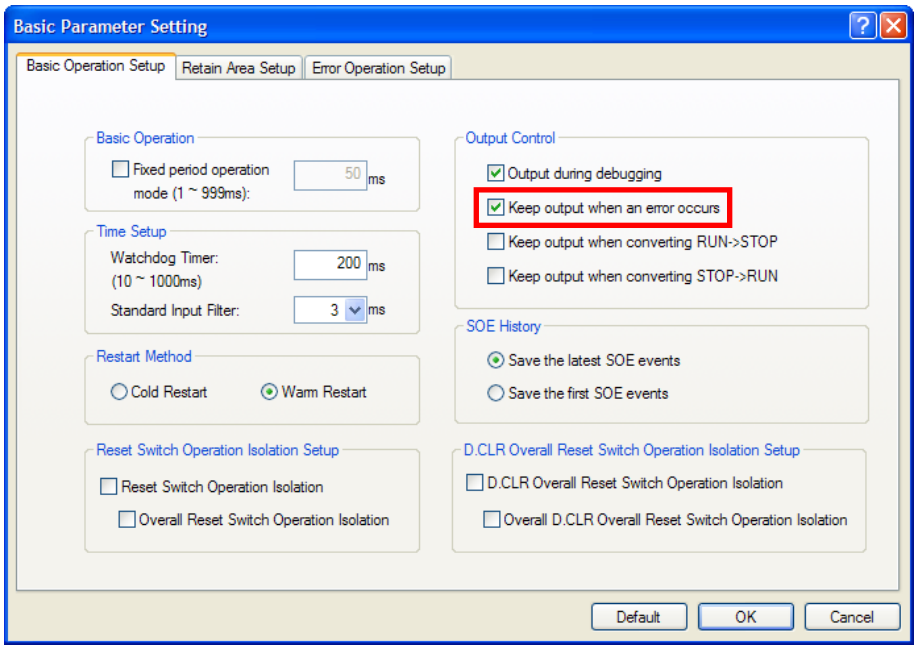

6.7.2 Data synchronization area setting

(1) M area setting
Setting can be made by 1 kbyte step within 1 ~ 256 kByte range.
Initial value: %MW0~%MW2000
Change in Start End method

(2) I/Q : setting by base unit
Setting can be made in base unit.
Initial value is 31 bases (error message if the setting value is less than the number of installed bases)

(3) PID : setting by block (max. 8 blocks)
For the synchronization area of the PID area, 32 PID areas are allocated for each block
- Initial value: 0 block

(4) R(W) : set R only, and automatic setting for W
Synchronization area for R(W) area
- Initial value: %RW0~%RW2000(%WW0~%WW2000, %WW32768~%WW34768)

⚠ Caution

(1) The M area retain can be set up in the “Basic Parameter Setting.” For details, see “5.5.3 Data Retain Area Setting.”
(2) When the master/standby CPUs are performing redundant operation, followings are automatically synchronized.
(a) L (high speed link flag), N(P2P parameter setting) device area
(b) F (system flag area) device area (however, individual flag areas are not synchronized).
(c) U (special module refresh area) device area (however, only installed modules are synchronized).
(3) If a variable value has been changed during monitoring by XG5000, it applies to the respective areas of the master and standby CPUs, regardless of the data synchronization area setting.

6.8 Setting operation of communication

Here you can set operation when FEnet module's cable is disconnected. According to setting, master CPU and Standby CPU are switchted automatically when FEnet module is disconnected.

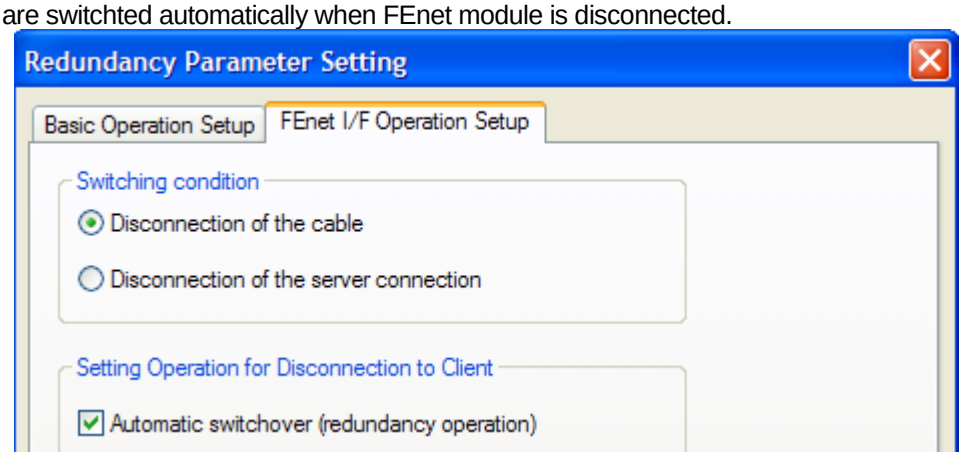

6.8.1 Automatic master switchover

(1) Automatic master switchover setting

When the cable of FEnet set as server or server connection is disconnected, you have to check the Automatic switchover for automatic master switchover. This setting is applied in case of redundancy operation

(2) Detail option

Here sets the condition for automatic master switchover through detail option. This means setting the group for each FEnet module installed at main base. Each module can be set as same group or not. When automatic master switchove setting and detail option setting is done, if the following two conditions are met, master switchove occurs.

(a) All master base FEnet module belonging to one group are disconnected and

(b) At least one standby base FEnet module belonging to the above group is under normal connection status

For example, In case you set slot 1 and slot 2 as group 1, slot 3 and slo4 as group 2 and slot 5 as group3, master switchover occurs under the following three conditions. (We assumes that FEnet modules on standby base are normal connection status)

(a) Slot 1 and slot 2 are disconnected or

(b) Slot3 and slot4 are disconnected or

(c) Slot 5 is disconnected

(3) Adding switchover condition items

-Cable disconnection: When the cable (media) is disconnected at the FEnet module, switchover is done within 1s by updating the flag instantly.

- Server disconnection: through the cable (media) is disconnected at the FEnet module, switchover is not done during connection wait time.

(But, when connection wait time is set as more than 5s, switchover is done within max. 6s)

6.8.2 Global status variable

After installing FEnet module, you can check the server connection status of FEnet module and physical cable connection status through Global variable at XG5000. In order to monitor global variable, register relevant variable at Variable Monitoring Window after executing [Edit]-[Register Special/Communication Module Variable] in XG5000. And these variables can be used at user program

Variable Monitoring Window

	PLC	Program	Variable/Device	Value	Type	Device/Variable	Comment
1	NewPLC	<GLOBAL>	%LX60312	10	BOOL	_0001_LINKUP_INFO	FEnet : Link up/down information
2	NewPLC	<GLOBAL>	%LW3774	HEX	WORD	_0001_SC_INFO	FEnet: Server connection state
3							

Monitor 1 / Monitor 2 / Monitor 3 / Monitor 4

(1) Sever connection status variable

Sever connection status variable indicates connection status of each client connected to server. Each bit indicates each client status in order of connection to server and if bit is on, it is normal connection status. Each bit indicates status of each client in the order as connected and if it's ON, its normal connection.

(2) Link up/down information variable

Link up/down information variable indicates physical cable connection status of relevant FEnet module. If variable is on, it means normal connection and if variable is off, it means disconnection or detachment

6.8.3 ONE IP Solution

You can connect to the master base FEnet module of XGR redundancy system with one IP regardless of master switchover through One IP Solution. For this, in case of master switchover, master base FEnet module and standby FEnet module change each other's IP address

(1) IP setting

You set IP of FEnet module at standard setting window after registering FEnet module at XG-PD. If you check ONE IP Solution of standard setting window, ONE IP Solution function will be activated. Unlike when ONE IP Solution is not used, you can set only one IP address (For how to set IP address when ONE IP Solution is not activated, refer to FEnet user manual). When using ONE IP Solution, IP address should be even number. That IP address becomes IP address of master base FEnet module and master base FEnet module's IP address + 1 becomes IP address of standby base FEnet module

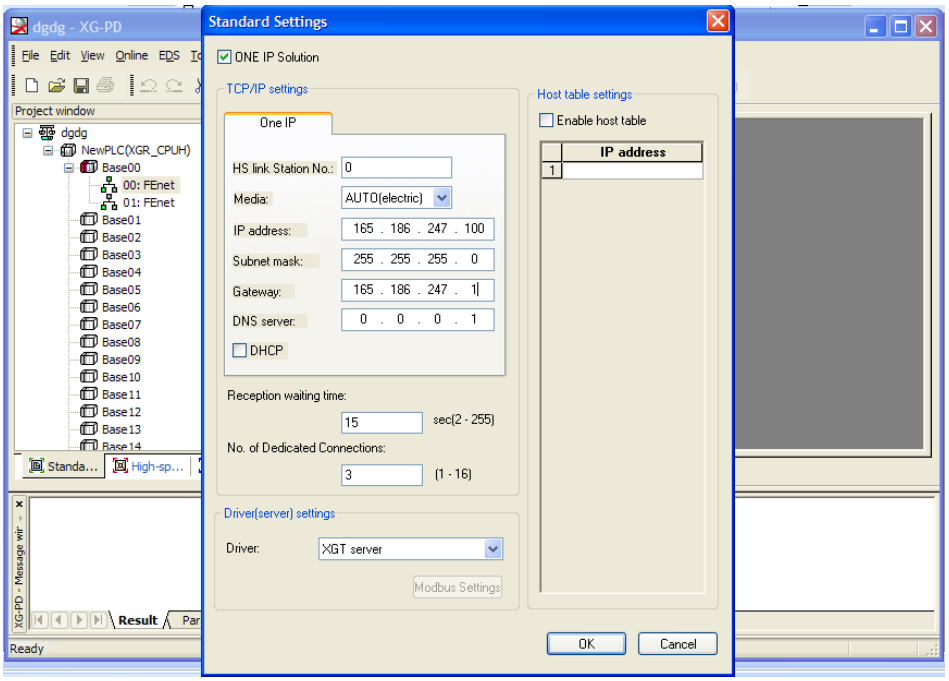

(2) IP change

If you use ONE IP Solution, in case of master switchover caused by error, communication disconnection, master base and standby FEnet modules change each other's IP address. For this, after master switchover, individual module reset is conducted.

⚠ Caution

(1) Individual module reset should be complete after master switchover so let no master switchover occurs again within 3 second (time for completing individual module reset) after master switchover.

6.9 Fault Mask Function

6.9.1 Applications and operations

(1) Fault mask helps a program keep operating even though a module is in trouble during operation. A module designated as fault mask normally works until a fault occurs.

(2) If an error occurs on a module on which fault mask is set, the module stops working but the entire system keeps working.

(3) If a fault occurs in a module during operation, the CPU module sets the error flag and “PS LED” on the front is “On.” The error is displayed when accessing to XG5000.

6.9.2 Fault mask setting

(1) Fault mask can be set by the online menu of XG5000. For the details, please refer to the user’s manual of XG5000.

(2) Fault mask setting by a program is not available. You can monitor the fault mask flag with program. (Refer to appendix1. flag list)

6.9.3 Releasing fault mask

Fault mask is released only by the following methods.
(1) Releasing the setting in the online menu of XG5000
(2) Releasing by overall reset
(3) Automatically releasing in case memory backup is failed due to low battery level and other causes

Note that the fault mask is not released even in the following cases.
(1) Power Off→On
(2) Operation mode change
(3) Program download
(4) Reset key(released only when it is pressed for 3 seconds and longer)
(5) Data clear

⚠ Caution

(1) If releasing fault mask with error flag in the CPU module not cleared although the causes of an error are eliminated, the system stops. Please check the state of error flag before releasing fault mask flag.
(2) To remove an error flag, release it after setting I/O skip in the respective module. For details, see [XG5000 online help desk >>I/O Skip.
(3) In case of XGR-CPU V1.8 or above, if you don’t set fault mask, warning message appears when connecting CPU via XG5000. In case of XGR-CPU V1.8 or above, “Warning for fault mask removal” option is added at Redundancy parameter.

6.10 I/O Module Skip Function

6.10.1 Applications and operations

During operation, the I/O module skip function excludes a designated module from the operation. For the designated module, the data update and fault diagnostics of I/O data stops as soon as being designated. It is available when temporarily operating it with the fault excluded.

6.10.2 Setting and processing I/O data

(1) It can be set at the unit of I/O module.
(For further information about setting, please refer to the user's manual of XG5000)

(2) Input(I) image area suspends input refresh, so it maintains the value set before skip setting. However, even in the case, the image manipulation by forcible On/Off is still effective.

(3) The actual output of output module is Off when setting the skip function but it changes depending on a user program's operation, irrespective of skip setting. After the skip setting, the output value of output module can not be controlled by forcible On/Off.

(4) The skip function is identically executed even when using I/O function.

6.10.3 Releasing skip function

The I/O module skip function is released only by the method of setting.
(1) Releasing by the online menu of XG5000
(2) Releasing by overall reset
(3) Automatically releasing in case memory backup is failed due to low battery level and other causes

Note that the fault mask is not released even in the following cases.
(1) Power Off→On
(2) Operation mode change
(3) Program download
(4) Reset key(released only when it is pressed for 3 seconds and longer)
(5) Data clear

⚠ Caution

If any fault is found in a module when releasing the skip function, the system may stop. Before releasing the skip function, make sure to release the skip with fault mask set and check the operation of a module.

6.11 Base Skip Function

6.11.1 Purpose and outline of the operation

Base skip is the function to exclude the designated base from operation during an operation. The excluded base stops all functions from the skip. This function is useful to continue operation by excluding a failed base or replace the base.

6.11.2 Setting method

- This setting can be done for each base.

6.11.3 Releasing skip function

Base skip can be released by following methods only.

- Selecting XG5000's [Online >> I/O Skip Setting] menu
- Release by Overall Reset
- Automatic release at backup memory lost by battery voltage drop, etc.

Note that followings do not release the failure mask;

- power Off → On,
- operation mode change,
- program download,
- reset key operation (however, released if pressed for 3 seconds or longer), and
- data clear

Caution

(1) When expansion driver is detached, all modules in base are automatically initialized.
(2) When expansion driver is detached, digital output module operates as set in Output control settings of Basic parameter.
(3) When expansion driver is detached, analog output module operates as set in Output type setting
(4) For more detail, refer to each module's user manual.

6.12 Module Replacement Function during Operation

A module can be replaced during operation in the redundant system. There are two methods. First, use “Hot swapping option” function of [table 5.1.4] redundancy parameter described in Chapter 5. Check the “How swapping option” and download only “Redundancy parameter” to PLC during RUN mode. Then replace base and module. Second, use “Online→Module changing wizard or Base changing wizard”

⚠ Warning

The special modules which can be normally replaced are A/D, D/A, TC, and RTD. HSC and APM modules can be replaced but the previous data cannot be maintained.
Some communication modules (XGL-PMEA, XGL-DMEA) can be connected as long as network is set(using Sycon software).

(1) When replacing a module, align the bottom of the base and the holding part of a module before inserting it. A wrong insertion may cause ‘system down.’

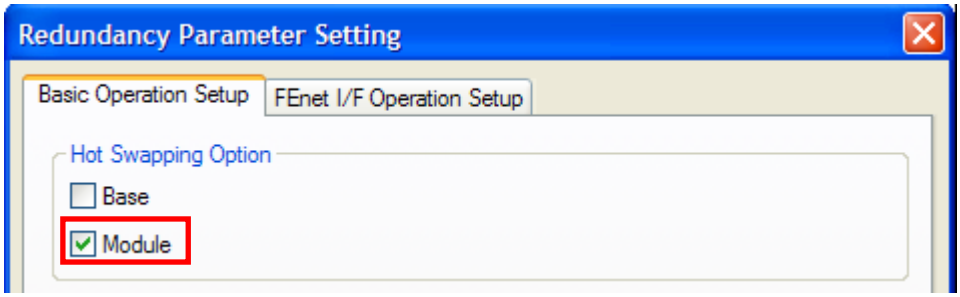

6.12.1 Module replacement in redundant system

CPU module, power module, I/O module, a certain special modules, and the base module can be replaced during redundant operation. For safety purpose, this Manual provides the methods using the Module Replacement Wizard, Base Replacement Wizard. And “Hot swapping option” in redundancy parameter is also available to replace the module.

6.12.2 Replacing I/O module in redundant system

To replace a module in the base in redundant operation, change the main base to backup operation status and cut-off the power. If the Module Replacement Wizard is used, the I/O and internal data of the module is lost.
(If you use “Hot swapping option”, you can change in RUN mode)

To replace a module, users can use XG5000’s [Online >> Module Replacement Wizard] function.
For details, see XG5000 User Manual [Online >> Module Replacement Wizard].

⚠ Caution

Replacement of the main base (base 0) using the XG5000’s [Online >> Module Replacement Wizard] function is available only during single CPU operation.

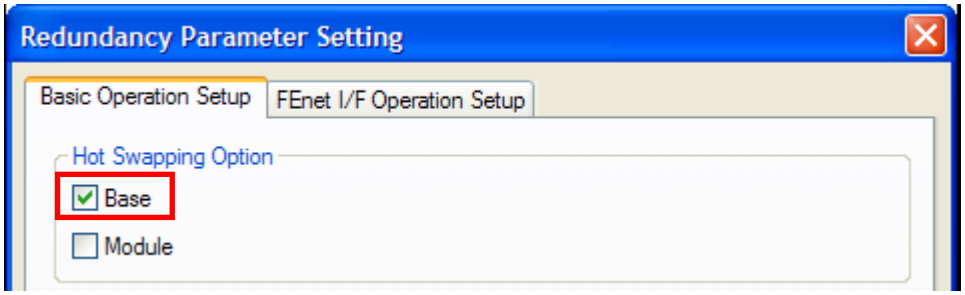

6.12.3 Replacing base module in redundant system

Bases can be replaced in redundant operation. For a line-configured system, the last base only can be replaced. For a ring-configured system, all the bases of the 1-31 bases which are participating in the operation can be replaced.

For safety purpose, this Manual provides XG5000's [Online >> Base Replacement Wizard] function. For further details, see XG5000 User Manual [Online >> Base Module Replacement Wizard].
(If you use "Hot swapping option", you can change in RUN mode)

⚠ Caution
In this process, only one base can be replaced at a time for safety reason. The main base cannot be replaced during operation. Ring configuration: available to change all extension bases Line configuration: available to change last extension base because of line configuration

Chapter 7 Expansion Drive Module

7.1 Performance specifications

Items		Specification		
		100BASE-FX (multi)	100BASE-FX (single)	100BASE-TX
Transmission Specification	Transmission Method	Base band		
	Max. Expansion distance between nodes	2km	15km	100m
	Max. Number of nodes	31		
	Max. Protocol size	1,516 byte		
	Communication access method	CSMA/CD		
	Frame error check method	CRC 32 = $X^{32} + X^{26} + X^{23} + ,,,,, + X^{2} + X + 1$		
Communication Media	Cable	Multi Mode Fiber	Single Mode Fiber	FTP / STP / SFTP
	Transmission speed	100Mbps		
	Flow control	Full Duplex		
	Communication port	2 port		
	Auto Crossover	Cross / Direct Cable is supported (Recommend : Cross cable)		
Network Topology		Ring, Line		
Conversion Time	Ring → Line(Bus)	10ms		
	Line(Bus) → Ring	500ms		
Basic Specification	Dimensions(mm)	98(H) X 27(W) X 90(D)		
	Current consumption (mA)	DBSF(S): 850 mA / DBSH(S): 660 mA / DBST: 490 mA DBDF(S): 770 mA / DBDH(S): 674 mA / DBDT: 359 mA		
	Weight (g)	DBSF(S): 102 g / DBSH(S): 101 g / DBST: 99 g DBDF(S): 100 g / DBDH(S): 98 g / DBDT: 98 g		

7.2 Identification and Function

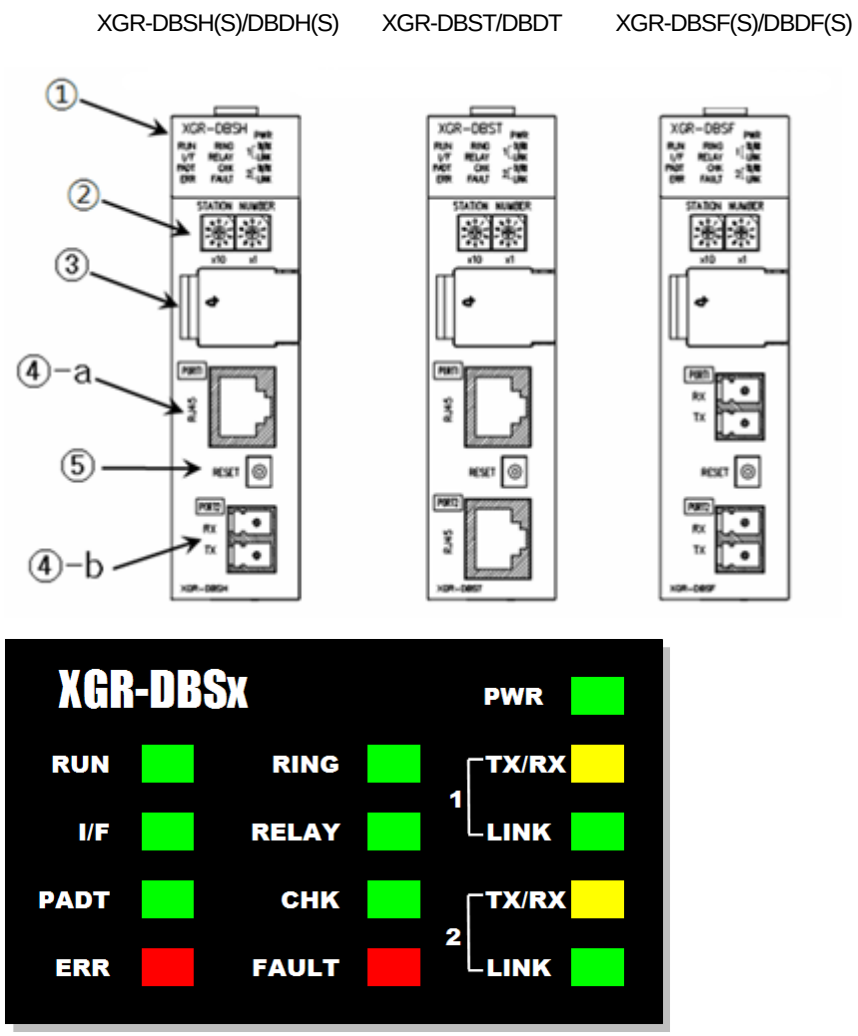

No.	Name	Description and Functions
①	Module Status Indicator	Status indicator LED of expansion drive module (1) TX/RX (yellow): when there is communication data to the channel (2) LINK (green): indicates the link connection of the channel (a) 1 indicates the upper channel (④ - a) status, and 2 indicates the lower channel (④ - b) status (3) RING (green) (a) On: the expansion network is ring configuration (b) Blink: the expansion network is switched from ring to bus (c) Off: the expansion network connection is off, or in bus configuration from the first

		(4) RELAY (green) (a) On: the module neighboring the two channels are connected and conducts as a data relay (b) Off: the module neighboring the two channels are connected and does not conduct as a data relay (5) CHK (green) (a) On: indicates CPU's WAR LED (b) Blink: station No. in the expansion network conflict (other station numbers) (6) FAULT (red) (a) On: network station No. conflict (self station No.) (b) Blink: frame error occurred (7) RUN (green) (a) On: CPU operation mode is RUN (b) Blink: expansion drive is in wait state for CPU recognition (c) Off: CPU operation mode is STOP (8) I/F (green) (a) Blink: in normal I/F with expansion manager (b) Off: I/F with expansion manager unavailable (9) PADT On (green): on in PADT connection (10) ERR On (red): CPU operation mode is ERR
②	Base Setting Switch	Switch for setting expansion base No. (1) x10 for 10 digit setting, x1 for 1 digit setting (2) Max. 31 bases can be set up (3) Error LED on at station No. conflict or setting more than 31 station numbers
③	USB Connector	Connector for peripheral devices (XG5000 etc.) (USB 1.1 supported)
④	Expansion Network Connector	Connector for expansion base connection. (1) 2 connectors are provided for ring connection without additional switching device (2) Optical-optical, electrical-electrical, and optical-electrical models are provided to enable network construction using mixed electrical/optical
⑤	Expansion Drive Module Reset Switch	Pressing this switch will trigger module reset operation. (1) Used to reset module only. (2) Make sure to skip the module before conducting module reset (3) Take care that resetting without skip setting of the respective base will cause module isolation error.

Chapter 8 Power Module

This chapter describes the selection, type and specifications of power module.

8.1 Type and Specification

We provide diverse types according to input voltage and output capacity. Select right module according to environment and system.

[Table 8.1.1] Power module specification

Item		XGR-AC12	XGR-AC22	XGR-AC13	XGR- AC23	XGR-DC42
Input	Rated input voltage	110 VAC	220 VAC	110 VAC	220 VAC	24 VDC
	Input voltage range	85V~132VAC	176V~264VAC	85V~132VAC	176V~264VAC	19.2 ~ 28.8 VDC
	Input frequency	50 / 60 Hz (47 ~ 63 Hz)				-
	Max. input power	110 VA / 42 W		176 VA / 72 W		-
	Inrush current	20A peak and lower (within8 ㎳)				80A peak and lower
	Efficiency	65% or higher				
	Input fuse	Built in(not replaceable by a user) - AC power: 250V / 3.15A (Time-lag Type) UL approved - DC power: 125V/10A (Time-lag type) UL approved				
	Allowed instantaneous interruption	Within 20 ㎳				
Output	Output voltage	5VDC (±2%)				
	Output current	5.5A		8.5A		7.5A
	Output power	27.5W @ 55℃		46.75W @ 55℃		37.5W @ 55℃
	Over current protection	6.0 A ~ 13.0 A		9.3 A ~ 17.0 A		9.0 A~17.0 A
Relay Output	Purpose	RUN contact (refer to 8.2)				
	Rated switching voltage/current	24VDC, 0.5A				
	Min. switching load	5VDC, 1 ㎃				
	Response time	Off→On/ On→Off: 10 ㎳ and lower/12 ㎳ and lower				
	Life	Mechanical life: 20 million and more times, electrical life: rated switching current: 100 thousand and more times				
Voltage status display		LED On when output voltage is normal				
Specification of cable		0.75 ~ 2 mm^2				
Available clamped terminal		RAV1.25-3.5, RAV2-3.5				
Dimension (W x H x D mm)		55 x 95 x 90		55 x 95 x 110		
Weight		326g	382g	334g	384g	417g
Applied base and install position		Power part of basic/expansion base		Power part of expansion base		Power part of basic/expansion base

Note

(1) Allowable instantaneous interruption time

(a) The time that the normal output voltage is maintained(normal operation) when AC110/220V/DC24V input voltage is less than rating value (AC 85/176V/DC 19.2V)

(2) Over current protection

(a) If a current over the rated level is allowed on 5VDC circuit, an over current protective system cuts off the circuit, suspending the system.

(b) If there is any overcurrent, the system should be restarted after eliminating the causes such as low current capacity, short-circuit and etc.

8.2 Parts' Names

It describes the names and applications of parts of the power module.

[Table 8.2.1] Parts' names and purpose

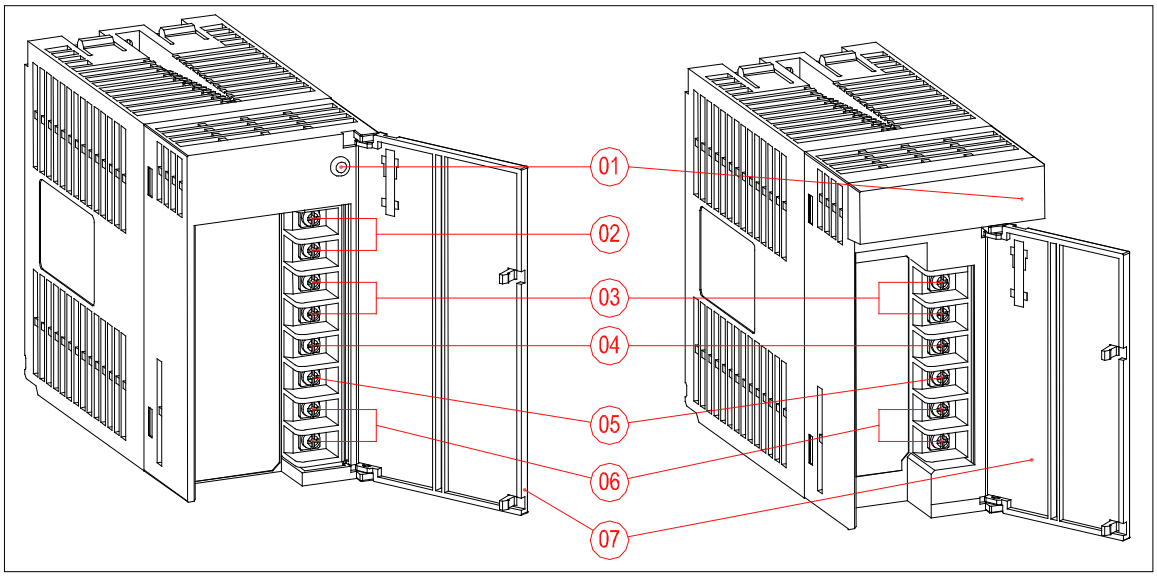

No.	Name	Purpose
1	Power LED	5VDC Power display LED
2	NC	Not used
3	RUN Terminal	Displaying RUN state of a system (1) On when CPU is normal RUN mode. (2) Off when the stop error of CPU occurs. (3) It is Off when the mode of CPU turns to STOP.
4	PE Terminal	Functional Grounding terminal for reliability of system operation.
5	LG Terminal	Grounding terminal of power filter
6	Power input Terminal	Power input terminal (1) XGR-AC12, XGP-AC13: 110VAC connection (2) XGR-AC22, XGP-AC23: 220VAC connection (3) XGR-DC42 : DC 24V connection
7	Terminal cover	Terminal unit protection cover

8.3 Selection

The selection of power module is determined by the current that input power voltage and power module should supply to the system, that is, the sum of current consumption of digital I/O module, special module and communication module that are installed on a same base with the power module.
If it exceeds the rated output capacity of power module, the system does not properly work.
Select a power module by considering the power current of each module when structuring a system.

[Table 8.3.1] Current consumption by modules

Item	Name	Consumption current (Unit: mA)	Item	Name	Consumption current (Unit: mA)
CPU module	XGR-CPUH/T	980	Analog input module	XGF-AV8A	420
				XGF-AC8A	420
	XGR-CPUH/F	1,310		XGF-AD4S	610
Expansion drive module	XGR-DBST	550		XGF-AD8A	420
	XGR-DBSF	550		XGF-AD16A	330
	XGR-DBSH	550	Analog output module	XGF-DV4A	190 (250)
DC24V input module	XGI-D21A	20		XGF-DC4A	190 (400)
	XGI-D22A	30		XGF-DC4S	200 (220)
	XGI-D22B	30		XGF-DV8A	147 (180)
	XGI-D24A	50		XGF-DC8A	243 (300)
	XGI-D24B	50		XGF-DV4S	200 (150)
	XGI-D28A	60	High speed counter module	XGF-HO2A	270
	XGI-D28B	60		XGF-HD2A	330
AC110V input module	XGI-A12A	30	Positioning module	XGF-PO3A	400
AC220V input module	XGI-A21A	20		XGF-PO2A	360
Relay output module	XGQ-RY1A	250		XGF-PO1A	340
	XGQ-RY2A	500		XGF-PD3A	860
	XGQ-RY2B	500		XGF-PD2A	790
Transistor output module	XGQ-TR2A	70		XGF-PD1A	510
	XGQ-TR2B	70		XGF-PO4H	430
	XGQ-TR4A	130		XGF-PO3H	420
	XGQ-TR4B	130		XGF-PO2H	410
	XGQ-TR8A	230		XGF-PO1H	400
	XGQ-TR8B	230		XGF-PD4H	890
Triac output module	XGQ-SS2A	300		XGF-PD3H	850
				XGF-PD2H	600
I/O module	XGH-DT4A	110		XGF-PD1H	520
			RTD input module	XGF-RD4A	450
FEnet I/F module (Optical/Electricity)	XGL-EFMF	640		XGF-RD4S	783
	XGL-EFMT	410	Thermocouple input module	XGF-TC4S	610
	XGL-ESHF	1,200	Event input module	XGF-SOEA	700
PAPIEnet I/F Module	XGL-EIMF	490	Motion control module	XGF-M16M	640
	XGL-EIMT	335	Analog I/O module	XGF-AH6A	770
	XGL-EIMH	400			

Item	Name	Consumption current (Unit: mA)	Item	Name	Consumption current (Unit: mA)
Ethernet/IP I/F module	XGL-EIPT	400	Dnet I/F module	XGL-DMEA	440
Cnet I/F module	XGL-C22A	330	FDEnet I/F module	XGL-EDMF	410
	XGL-C42A	300		XGL-EDMT	410
	XGL-CH2A	340	Pnet I/F module	XGL-PMEA	560
Rnet I/F module	XGL-RMEA	410	-	-	-

( ) means the current consumption for external DC24V.

8.4 Example of Current Consumption/Power Calculations

It describes which power module should be used for the XGR system with the following module.

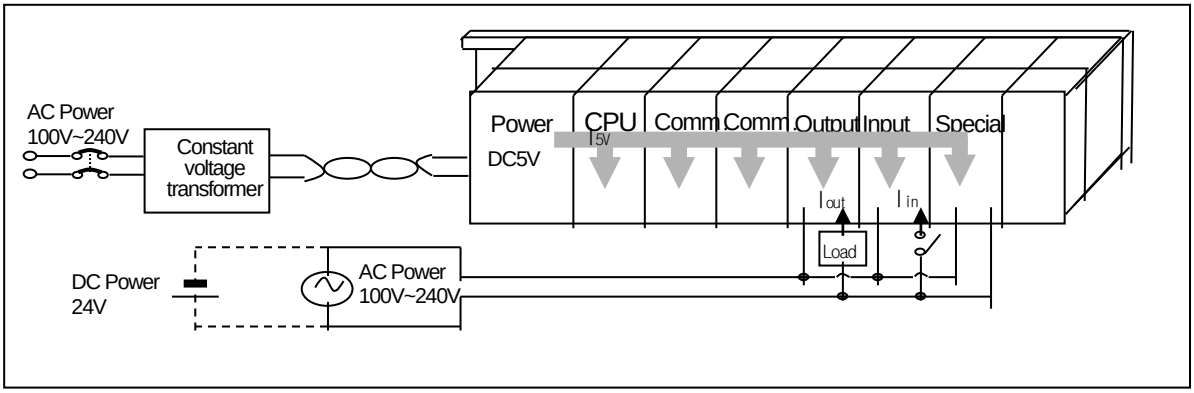

[Figure 8.4.1] Example of use of power module

8.4.1 In case of basic base

Though you equip all modules that consume maximum current, it is not higher than 5.5A. So consider input voltage and select XGR-AC12 or XGT-AC22

[Table 8.4.1] Consumption current/power calculation of basic base

Type	Name	No. of equipment	Consumption current (5V)
CPU module	XGR-CPUH/F	1	1.31A
Basic base	XGR-M02P	1	0.2A
	XGR-M06P	1	0.2A
FEnet module	XGL-EFMF	6	0.61A
Consumption current (Total) / Power (Total)			1.31A + 0.61A*6 = 4.97A / 4.97×5V = 24.85W

8.4.2 In case of expansion base

Calculate the consumption current of module equipped at expansion base and select 5.5A or 8.5A

[Table 8.4.2] Consumption current/power calculation of basic base

Type	Name	No. of equipment	Consumption current (5V)
Expansion drive module	XGR-DBSF	1	0.65A
Expansion base	XGB-E12RP	1	0.21A
Input module	XGI-D24A	2	0.05A
Output module	XGQ-RY2A	6	0.5A
A/D conversion module	XGF-AD4S	2	0.61A
Profibus-DP	XGL-PMEA	2	0.56A
Consumption current (Total) / Power (Total)			0.65A + 0.21A+0.05A*2 + 0.5A*6 + 0.61A*2 + 0.56A*2 = 6.30A / 6.30A × 5V = 31.50 W

Since total of consumption current (5V) is 6.17A, use one among XGR-AC13, XGP-AC23 according to input voltage.
If power module is less than a necessary capacity, reliability of system is not guaranteed.

Note

If efficiency of power module is applied to power (5V), the user can estimates the maximum input power of PLC system.
Ex) Total of consumption power (5V) / Power module efficiency (Min.) = 100 W / 0.65 % = 154 W

Chapter 9. I/O Module

9.1 Cautions for Selecting Module

It describes the cautions when selecting digital I/O modules used for the XGI series.

1) There are two digital input types; current sink input and current source input
Since the wiring method of external input power varies in a DC input module, it should be selected considering the specifications of input connectors.

2) The max. simultaneous input point varies depending on a module type. That is, it may be different, depending on input voltage and ambient temperature. Please review the specifications of input module to apply before use.

3) In case of an application for highly frequent switching or inductive load switching, the relay output module may have a shorter life, so it needs a transistor module or triac output module, instead of it.

4) If an output module operates an inductive load(L), the max. On/Off frequency should be limited to On per 1 second and Off per 1 second, each.

5) In case a counter timer using DC/DC converter is used as a load in an output module, setting the average current may cause a trouble because it may have inrush current in case of On or a certain cycle during operation. Therefore, if using the foresaid load, it is necessary to connect resistance or inductor parallel to load or alternatively use a module of which max. load current is large.

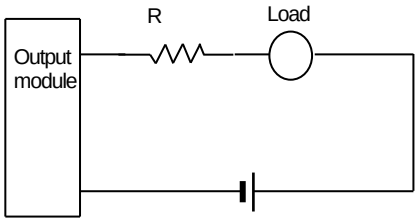

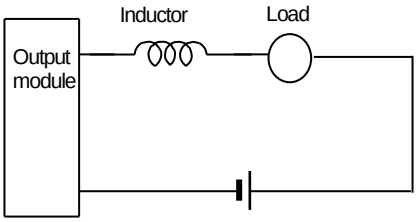

6) A fuse in an output module can not be replaced. That's why it is intended to prevent external wiring from being damaged when the output of a module is short-circuited. Therefore, the output module may not be protected. If an output module is destructed in any other fault mode save for short-circuit, a fuse may not work.

7) The following figure shows the relay life of relay output module.
It also shows the max. life of relay used for relay output.

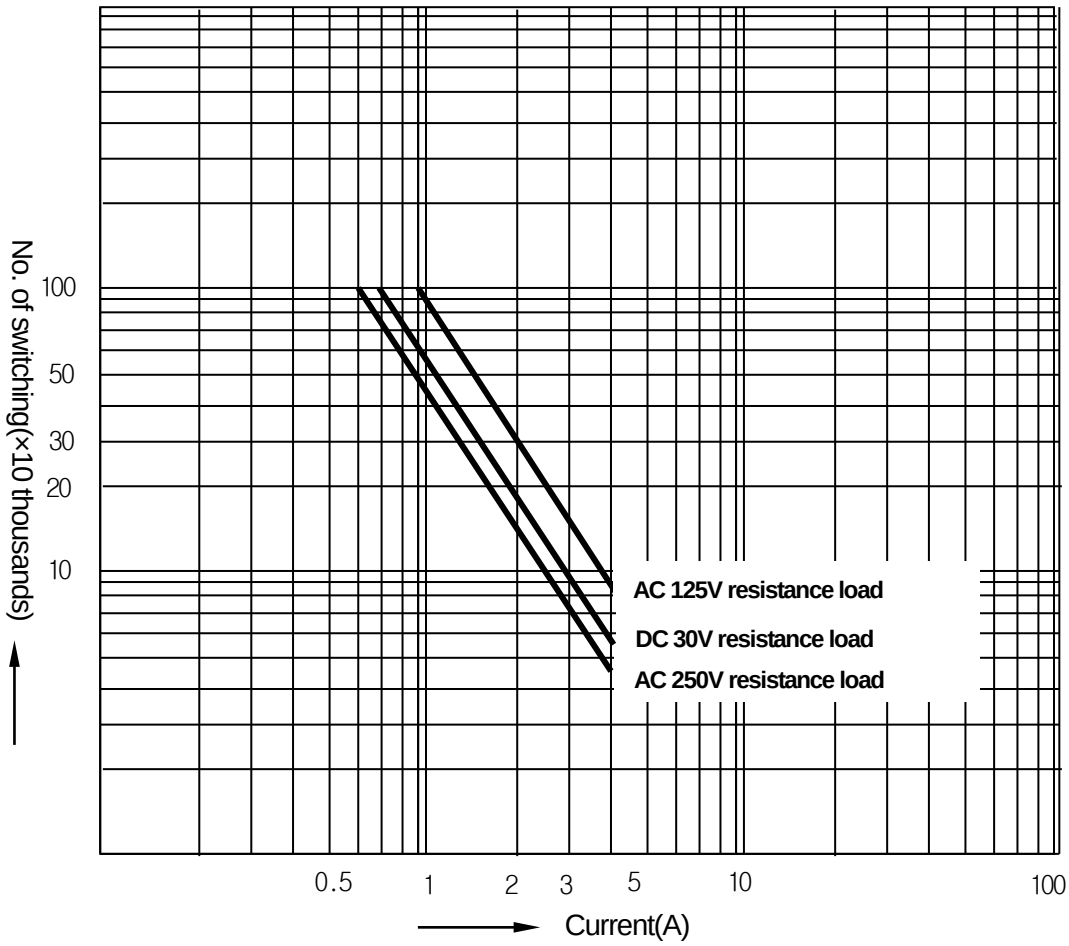

8) A clamped terminal with sleeve can not be used for the XGI terminal strip. The clamped terminals suitable for terminal strip are as follows(JOR 1.25-3:Daedong Electricity).

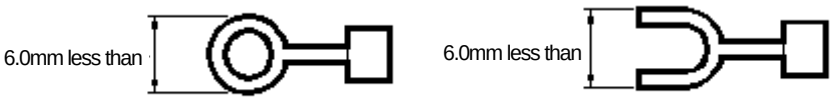

9) The cable size connected to a terminal strip should be 0.3~0.75 ㎟ stranded cable and 2.8 ㎜ thick. The cable may have different current allowance depending on the insulation thickness.

10) The coupling torque available for fixation screw and terminal strip screw should follow the table below.

Coupling position	Coupling torque range
IO module terminal strip screw(M3 screw)	42 ~ 58 N·㎝
IO module terminal strip fixation screw(M3 screw)	66 ~ 89 N·㎝

11) Transistor output module(XGQ-TR4A, XGQ-TR8A) supports terminal protector function.
Thermal Protector is the function to prevent overload and overheat.

9.2 Digital Input Module Specifications

9.2.1 8 point DC24V input module (source/sink type)

Spec. \ Module type		DC Input module XGI-D21A
Input point		8 points
Insulation method		Photo coupler insulation
Rated input voltage		DC24V
Rated input current		Approx. 4 ㎃
Voltage range		DC20.4~28.8V (5% and lower ripple rate)
Input derating		None
On voltage / On current		DC19V and higher / 3 mA and higher
Off voltage / Off current		DC11V and lower / 1.7 mA and lower
Input resistance		Approx. 5.6 kΩ
Response time	Off → On	1ms/3ms/5ms/10ms/20ms/70ms/100ms (Set by CPU Parameter) Initial value:3ms
	On → Off	1ms/3ms/5ms/10ms/20ms/70ms/100ms (Set by CPU Parameter) Initial value:3ms
Withstand voltage		AC560V rms/3 Cycle (altitude 2000m)
Insulation resistance		10 ㏁ and higher by Insulation ohmmeter
Common method		16 point/ COM
Suitable cable size		Stranded cable between 0.3~0.75 ㎟ (2.8mm and smaller outer dia.)
Suitable clamped terminal		R1.25-3 (Sleeve built-in clamped terminal is not available)
Current consumption(㎃)		20mA
Operation display		LED On with Input On
External connection method		9 point Terminal strip connector (M3 X 6 screws)
Weight		0.1 kg

Circuit diagram

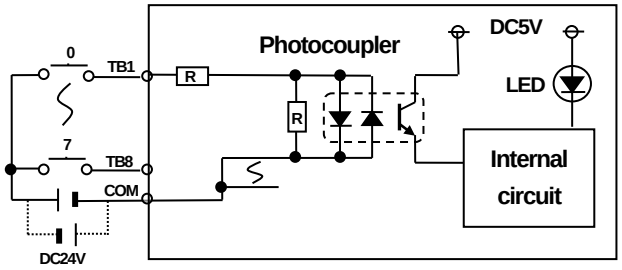

* COM : TB9

Terminal block	Contact
TB1	0
TB2	1
TB3	2
TB4	3
TB5	4
TB6	5
TB7	6
TB8	7
TB9	COM

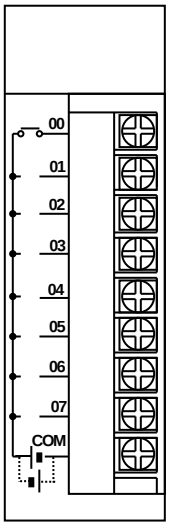

9.2.2 16 point DC24V input module (source/sink type)

Spec. \ Module type		DC Input module XGI-D22A
Input point		16 points
Insulation method		Photo coupler insulation
Rated input voltage		DC24V
Rated input current		Approx. 4 ㎃
Voltage range		DC20.4~28.8V (5% and lower ripple rate)
Input derating		None
On voltage / On current		DC 15V and higher / 3mA and higher
Off voltage / Off current		DC 12V and lower / 1.7mA and lower
Input resistance		Approx. 5.6 kΩ
Response time	Off → On	1ms/3ms/5ms/10ms/20ms/70ms/100ms (Set by CPU Parameter) Initial value:3ms
	On → Off	1ms/3ms/5ms/10ms/20ms/70ms/100ms (Set by CPU Parameter) Initial value:3ms
Insulation withstand voltage		AC560V rms/3 Cycle (altitude 2000m)
Insulation resistance		10 ㏁ and higher by Insulation ohmmeter
Common method		16 point/ COM
Suitable cable size		Stranded cable between 0.3~0.75 ㎟ (2.8mm and smaller outer dia.)
Suitable clamped terminal		R1.25-3 (Sleeve built-in clamped terminal is not available)
Current consumption(㎃)		30mA
Operation display		LED On with Input On
External connection method		18 point Terminal strip connector (M3 X 6 screws)
Weight		0.12 kg

Circuit diagram

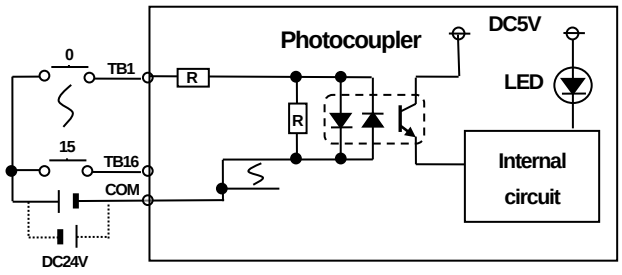

* COM : TB17

Terminal block	Contact
TB1	0
TB2	1
TB3	2
TB4	3
TB5	4
TB6	5
TB7	6
TB8	7
TB9	8
TB10	9
TB11	10
TB12	11
TB13	12
TB14	13
TB15	14
TB16	15
TB17	COM
TB18	NC

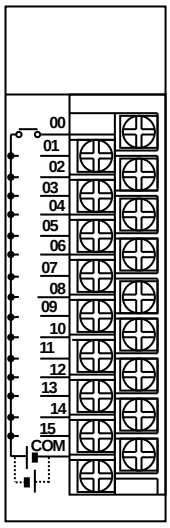

9.2.3 16 point DC24V input module (source type)

Spec. \ Module type		DC Input module XGI-D22B
Input point		16 points
Insulation method		Photo coupler insulation
Rated input voltage		DC24V
Rated input current		Approx. 4 ㎃
Voltage range		DC20.4~28.8V (5% and lower ripple rate)
Input derating		None
On voltage / On current		DC 19V and higher / 3mA and higher
Off voltage / Off current		DC 11V and lower / 1.7mA and lower
Input resistance		Approx. 5.6 kΩ
Response time	Off → On	1ms/3ms/5ms/10ms/20ms/70ms/100ms (Set by CPU Parameter) Initial value:3ms
	On → Off	1ms/3ms/5ms/10ms/20ms/70ms/100ms (Set by CPU Parameter) Initial value:3ms
Insulation withstand voltage		AC560V rms/3 Cycle (altitude 2000m)
Insulation resistance		10 ㏁ and higher by Insulation ohmmeter
Common method		16 point/ COM
Suitable cable size		Stranded cable between 0.3~0.75 ㎟ (2.8mm and smaller outer dia.)
Suitable clamped terminal		R1.25-3 (Sleeve built-in clamped terminal is not available)
Current consumption(㎃)		30mA
Operation display		LED On with Input On
External connection method		18point Terminal strip connector (M3 X 6 screws)
Weight		0.12 kg

Circuit diagram

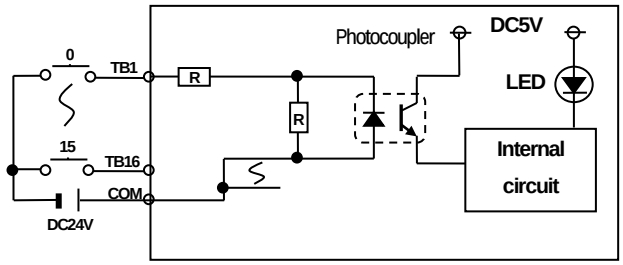

* COM : TB17

Terminal block	Contact
TB1	0
TB2	1
TB3	2
TB4	3
TB5	4
TB6	5
TB7	6
TB8	7
TB9	8
TB10	9
TB11	10
TB12	11
TB13	12
TB14	13
TB15	14
TB16	15
TB17	COM
TB18	NC

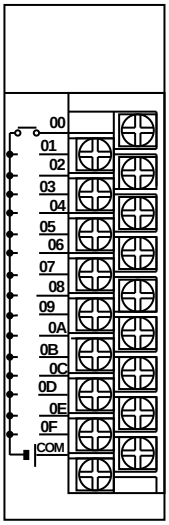

9.2.4 32 point DC24V input module (source/sink type)

Spec. \ Module type		DC Input module XGI-D24A
Input point		32 points
Insulation method		Photo coupler insulation
Rated input voltage		DC24V
Rated input current		Approx. 4 ㎃
Voltage range		DC20.4~28.8V (5% and lower ripple rate)
Input derating		Refer to the below derating level
On voltage / On current		DC 19V and higher / 3mA and higher
Off voltage / Off current		DC 11V and lower / 1.7mA and lower
Input resistance		Approx. 5.6 kΩ
Response time	Off → On	1ms/3ms/5ms/10ms/20ms/70ms/100ms (Set by CPU Parameter) Initial value:3ms
	On → Off	1ms/3ms/5ms/10ms/20ms/70ms/100ms (Set by CPU Parameter) Initial value:3ms
Insulation withstand voltage		AC560V rms/3 Cycle (altitude 2000m)
Insulation resistance		10 ㏁ and higher by Insulation ohmmeter
Common method		32points / COM
Suitable cable size		0.3 ㎟
Current consumption(㎃)		50mA
Operation display		LED On with Input On
External connection method		40point connector
Weight		0.1 kg

Circuit diagram

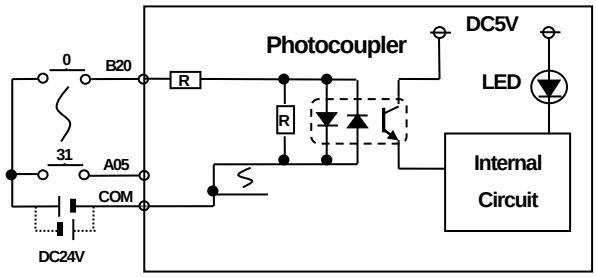

* COM : B02, B01, A02, A01

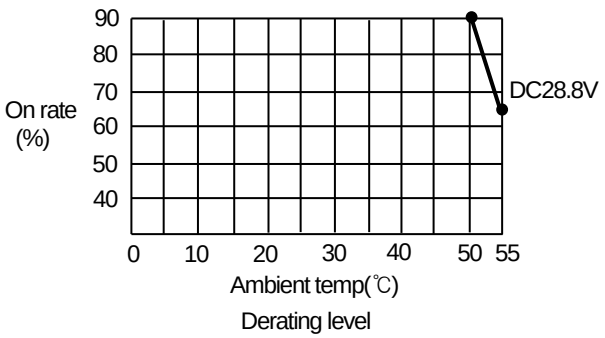

Derating level

No	Contact	No	Contact
B20	0	A20	16
B19	1	A19	17
B18	2	A18	18
B17	3	A17	19
B16	4	A16	20
B15	5	A15	21
B14	6	A14	22
B13	7	A13	23
B12	8	A12	24
B11	9	A11	25
B10	10	A10	26
B09	11	A09	27
B08	12	A08	28
B07	13	A07	29
B06	14	A06	30
B05	15	A05	31
B04	NC	A04	NC
B03	NC	A03	NC
B02	COM	A02	COM
B01	COM	A01	COM

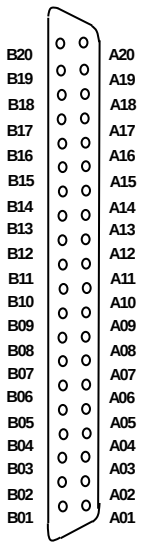

9.2.5 32 point DC24V input module (source type)

Spec. \ Module type		DC Input module XGI-D24B
Input point		32 points
Insulation method		Photo coupler insulation
Rated input voltage		DC24V
Rated input current		Approx. 4 ㎃
Voltage range		DC20.4~28.8V (5% and lower ripple rate)
Input derating		Refer to the below derating level
On voltage / On current		DC19V and higher / 3 mA and higher
Off voltage / Off current		DC 11V and lower / 1.7mA and lower
Input resistance		Approx. 5.6 kΩ
Response time	Off → On	1ms/3ms/5ms/10ms/20ms/70ms/100ms (Set by CPU Parameter) Initial value:3ms
	On → Off	1ms/3ms/5ms/10ms/20ms/70ms/100ms (Set by CPU Parameter) Initial value:3ms
Insulation withstand voltage		AC560V rms/3 Cycle (altitude 2000m)
Insulation resistance		10 ㏁ and higher by Insulation ohmmeter
Common method		32 points / COM
Suitable cable size		0.3 ㎟
Current consumption(㎃)		50mA
Operation display		LED On with Input On
External connection method		40point connector
Weight		0.1 kg

Circuit diagram

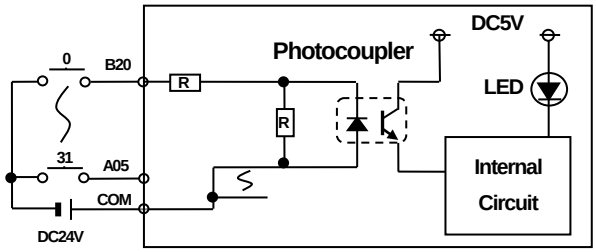

* COM : B02, B01, A02, A01

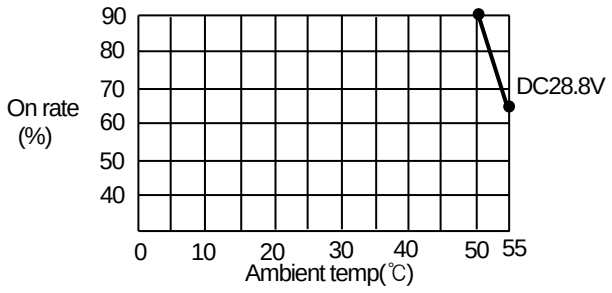

Derating level

No	Contact	No	Contact
B20	0	A20	16
B19	1	A19	17
B18	2	A18	18
B17	3	A17	19
B16	4	A16	20
B15	5	A15	21
B14	6	A14	22
B13	7	A13	23
B12	8	A12	24
B11	9	A11	25
B10	10	A10	26
B09	11	A09	27
B08	12	A08	28
B07	13	A07	29
B06	14	A06	30
B05	15	A05	31
B04	NC	A04	NC
B03	NC	A03	NC
B02	COM	A02	COM
B01	COM	A01	COM

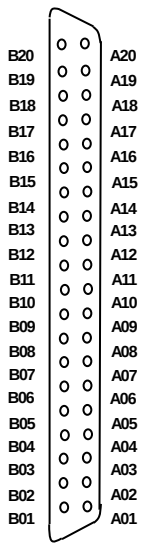

9.2.6 64 point DC24V input module (source/sink type)

Spec. \ Module type		DC Input module XGI-D28A
Input point		64 points
Insulation method		Photo coupler insulation
Rated input voltage		DC24V
Rated input current		Approx. 4 ㎃
Voltage range		DC20.4~28.8V (5% and lower ripple rate)
Input derating		Refer to the below derating level
On voltage / On current		DC 19V and higher / 3mA and higher
Off voltage / Off current		DC 11V and lower / 1.7mA and lower
Input resistance		Approx. 5.6 kΩ
Response time	Off → On	1ms/3ms/5ms/10ms/20ms/70ms/100ms (Set by CPU Parameter) Initial value:3ms
	On → Off	1ms/3ms/5ms/10ms/20ms/70ms/100ms (Set by CPU Parameter) Initial value:3ms
Insulation withstand voltage		AC560V rms/3 Cycle (altitude 2000m)
Insulation resistance		10 ㏁ and higher by Insulation ohmmeter
Common method		32point / COM
Suitable cable size		0.3 ㎟
Current consumption(㎃)		60mA
Operation display		LED On with Input On (32point LED on by switching)
External connection method		40point connector × 2
Weight		0.15 kg

Circuit diagram

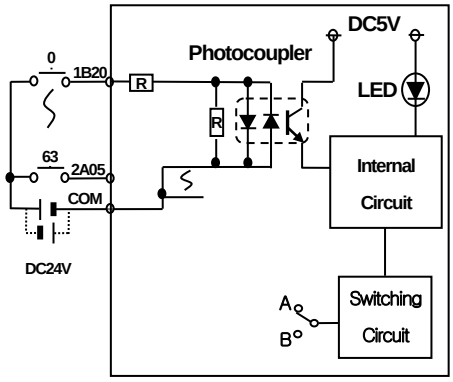

* COM : 1B02, 1B01
2B02, 2B01

A: Displaying 0~31

B: Displaying 32~63

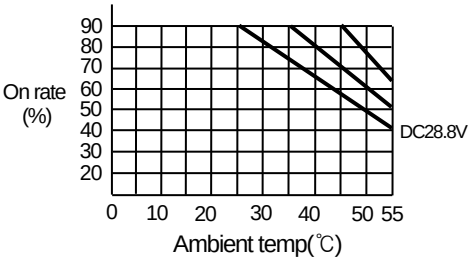

Derating level

No	Contact	No	Contact	No	Contact	No	Contact
1B20	0	1A20	16	2B20	32	2A20	48
1B19	1	1A19	17	2B19	33	2A19	49
1B18	2	1A18	18	2B18	34	2A18	50
1B17	3	1A17	19	2B17	35	2A17	51
1B16	4	1A16	20	2B16	36	2A16	52
1B15	5	1A15	21	2B15	37	2A15	53
1B14	6	1A14	22	2B14	38	2A14	54
1B13	7	1A13	23	2B13	39	2A13	55
1B12	8	1A12	24	2B12	40	2A12	56
1B11	9	1A11	25	2B11	41	2A11	57
1B10	10	1A10	26	2B10	42	2A10	58
1B09	11	1A09	27	2B09	43	2A09	59
1B08	12	1A08	28	2B08	44	2A08	60
1B07	13	1A07	29	2B07	45	2A07	61
1B06	14	1A06	30	2B06	46	2A06	62
1B05	15	1A05	31	2B05	47	2A05	63
1B04	NC	1A04	NC	2B04	NC	2A04	NC
1B03	NC	1A03	NC	2B03	NC	2A03	NC
1B02	COM	1A02	NC	2B02	COM	2A02	NC
1B01	COM	1A01	NC	2B01	COM	2A01	NC

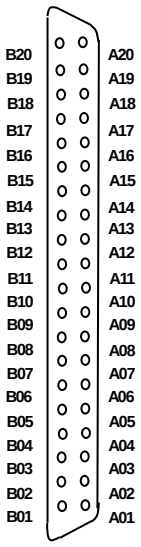

9.2.7 64 point DC24V input module (source type)

Spec. \ Module type		DC Input module XGI-D28B
Input point		64 points
Insulation method		Photo coupler insulation
Rated input voltage		DC24V
Rated input current		Approx. 4 ㎃
Voltage range		DC20.4~28.8V (5% and lower ripple rate)
Input derating		Refer to the below derating level
On voltage / On current		DC 19V and higher / 3mA and higher
Off voltage / Off current		DC 11V and lower / 1.7mA and lower
Input resistance		Approx. 5.6 kΩ
Response time	Off → On	1ms/3ms/5ms/10ms/20ms/70ms/100ms(Set by CPU Parameter) Initial value:3ms
	On → Off	1ms/3ms/5ms/10ms/20ms/70ms/100ms (Set by CPU Parameter) Initial value:3ms
Insulation withstand voltage		AC560V rms/3 Cycle (altitude 2000m)
Insulation resistance		10 ㏁ and higher by Insulation ohmmeter
Common method		32 points / COM
Suitable cable size		0.3 ㎟
Current consumption(㎃)		60mA
Operation display		LED On with Input On (32point LED on by switching)
External connection method		40point connector × 2
Weight		0.15 kg

Circuit diagram

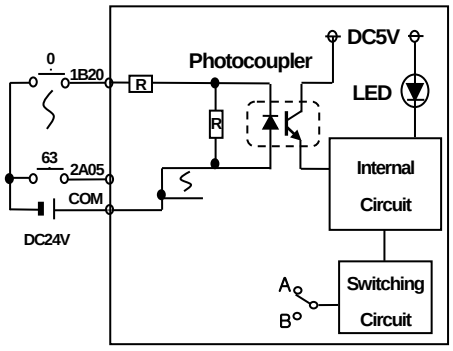

* COM : 1B02, 1B01
2B02, 2B01

A: Displaying 0~31

B: Displaying 32~63

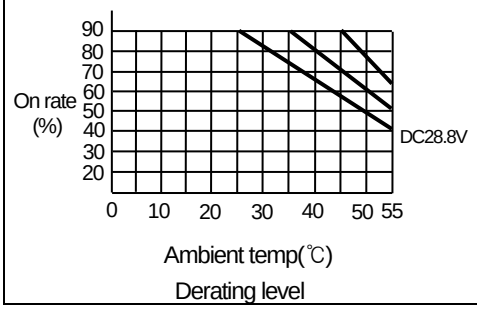

Derating level

No	Contact	No	Contact	No	Contact	No	Contact
1B20	0	1A20	16	2B20	32	2A20	48
1B19	1	1A19	17	2B19	33	2A19	49
1B18	2	1A18	18	2B18	34	2A18	50
1B17	3	1A17	19	2B17	35	2A17	51
1B16	4	1A16	20	2B16	36	2A16	52
1B15	5	1A15	21	2B15	37	2A15	53
1B14	6	1A14	22	2B14	38	2A14	54
1B13	7	1A13	23	2B13	39	2A13	55
1B12	8	1A12	24	2B12	40	2A12	56
1B11	9	1A11	25	2B11	41	2A11	57
1B10	10	1A10	26	2B10	42	2A10	58
1B09	11	1A09	27	2B09	43	2A09	59
1B08	12	1A08	28	2B08	44	2A08	60
1B07	13	1A07	29	2B07	45	2A07	61
1B06	14	1A06	30	2B06	46	2A06	62
1B05	15	1A05	31	2B05	47	2A05	63
1B04	NC	1A04	NC	2B04	NC	2A04	NC
1B03	NC	1A03	NC	2B03	NC	2A03	NC
1B02	COM	1A02	NC	2B02	COM	2A02	NC
1B01	COM	1A01	NC	2B01	COM	2A01	NC

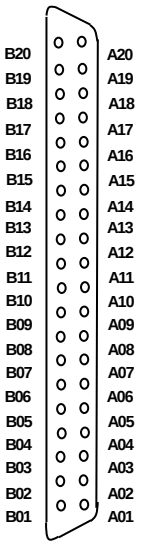

9.2.8 16 point AC110V input module

Spec. \ Module type		AC Input module
		XGI-A12A
Input point		16 points
Insulation method		Photo coupler insulation
Rated input voltage		AC100-120V(+10/-15%) 50/60 ㎐(±3 ㎐) (5% and lower distortion)
Rated input current		Approx. 8 ㎃ (AC100,60 ㎐) , approx. 7 ㎃ (AC100,50 ㎐)
Inrush current		Max. 200 ㎃ 1 ㎳ and lower(AC132V)
Input derating		Refer to the below derating level
On voltage / On current		AC80V and higher / 5 mA and higher(50 ㎐,60 ㎐)
Off voltage / Off current		AC30V and lower / 1 mA and lower (50 ㎐,60 ㎐)
Input resistance		Approx. 12 kΩ(60 ㎐), approx. 15 kΩ(50 ㎐)
Response time	Off → On	15 ms and lower(AC100V 50 ㎐,60 ㎐)
	On → Off	25 ms and lower(AC100V 50 ㎐,60 ㎐)
Insulation withstand voltage		AC1780V rms/3 Cycle (altitude 2000m)
Insulation resistance		10 ㏁ and higher by Insulation ohmmeter
Common method		16 point/ COM
Suitable cable size		Stranded cable between 0.3~0.75 ㎟ (2.8mm and smaller outer dia.)
Suitable clamped terminal		R1.25-3 (Sleeve built-in clamped terminal is not available)
Current consumption(㎃)		30mA
Operation display		LED On with Input On
External connection method		18point Terminal strip connector (M3 X 6 screws)
Weight		0.13 kg

Circuit diagram

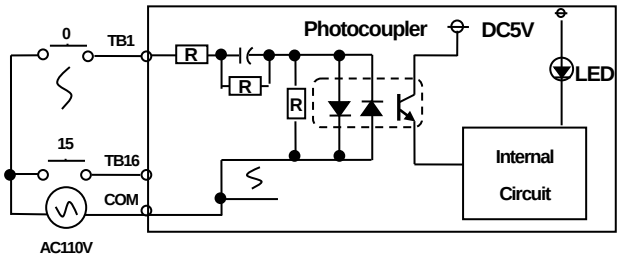

* COM : TB17

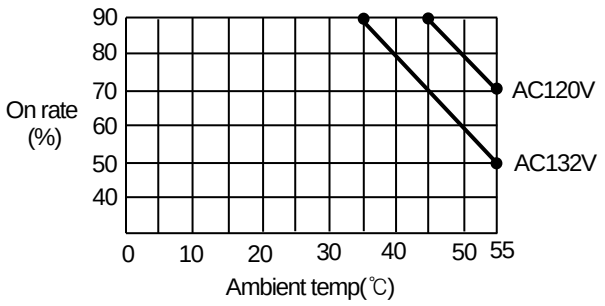

Derating level

Terminal block	Contact
TB1	0
TB2	1
TB3	2
TB4	3
TB5	4
TB6	5
TB7	6
TB8	7
TB9	8
TB10	9
TB11	10
TB12	11
TB13	12
TB14	13
TB15	14
TB16	15
TB17	COM
TB18	NC

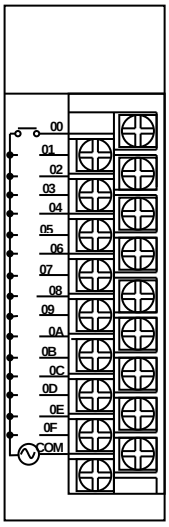

9.2.9 8 point AC220V input module

Spec. \ Module type		AC input module
		XGI-A21A
Input point		8 points
Insulation method		Photo coupler insulation
Rated input voltage		AC100-240V(+10/-15%) 50/60 ㎐(±3 ㎐) (5% and lower distortion)
Rated input current		Approx. 17 ㎃ (AC200,60 ㎐) , approx. 14 ㎃ (AC200,50 ㎐)
Inrush current		Max. 500 ㎃ 1 ㎳ and lower(AC264V)
Input derating		Refer to the below derating level
On voltage / On current		AC80V and higher / 5 mA and higher(50 ㎐,60 ㎐)
Off voltage / Off current		AC30V and lower / 1 mA and lower (50 ㎐,60 ㎐)
Input resistance		Approx. 12 kΩ(60 ㎐), approx. 15 kΩ(50 ㎐)
Response time	Off → On	15 ms and lower(AC200V 50 ㎐,60 ㎐)
	On → Off	25 ms and lower(AC200V 50 ㎐,60 ㎐)
Insulation withstand voltage		AC2830V rms/3 Cycle (altitude 2000m)
Insulation resistance		10 ㏁ and higher by Insulation ohmmeter
Common method		8 points / COM
Suitable cable size		Stranded cable between 0.3~0.75 ㎟ (2.8mm and smaller outer dia.)
Suitable clamped terminal		R1.25-3 (Sleeve built-in clamped terminal is not available)
Current consumption(㎃)		20mA
Operation display		LED On with Input On
External connection method		9point Terminal strip connector (M3 X 6 screws)
Weight		0.13 kg

Circuit diagram

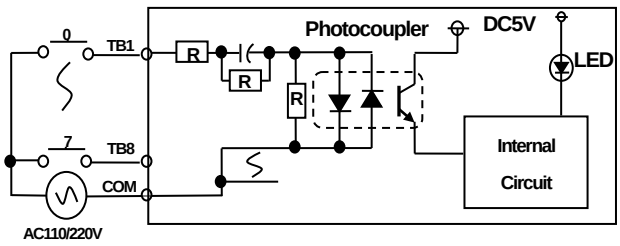

* COM : TB9

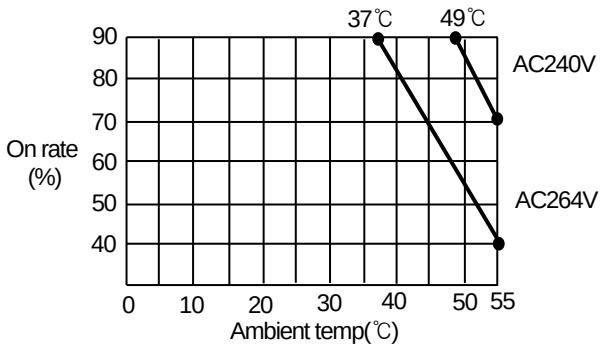

Derating level

Terminal block	Contact
TB1	0
TB2	1
TB3	2
TB4	3
TB5	4
TB6	5
TB7	6
TB8	7
TB9	COM

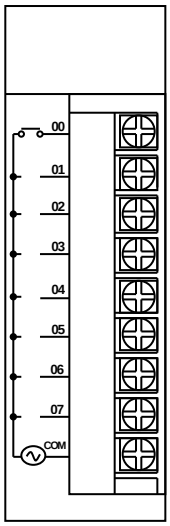

9.2.10 8 point AC220V isolated input module

Spec. \ Module type		AC input module
		XGI-A21C
Input point		8 points
Insulation method		Photo coupler insulation
Rated input voltage		AC100-240V(+10/-15%) 50/60 ㎐(±3 ㎐) (5% and lower distortion)
Rated input current		Approx. 17 ㎃ (AC200,60 ㎐) , approx. 14 ㎃ (AC200,50 ㎐)
Inrush current		Max. 500 ㎃ 1 ㎳ and lower(AC264V)
Input derating		Refer to the below derating level
On voltage / On current		AC80V and higher / 5 mA and higher (50 ㎐,60 ㎐)
Off voltage / Off current		AC30V and lower / 1 mA and lower (50 ㎐,60 ㎐)
Input resistance		Approx. 12 kΩ(60 ㎐), approx. 15 kΩ(50 ㎐)
Response time	Off → On	15 ms and lower(AC200V 50 ㎐, 60 ㎐)
	On → Off	25 ms and lower(AC200V 50 ㎐, 60 ㎐)
Insulation withstand voltage		AC2830V rms/3 Cycle (altitude 2000m)
Insulation resistance		10 ㏁ and higher by Insulation ohmmeter
Common method		1 point / COM
Suitable cable size		Stranded cable between 0.3~0.75 ㎟ (2.8mm and smaller outer dia.)
Suitable clamped terminal		R1.25-3 (Sleeve built-in clamped terminal is not available)
Current consumption(㎃)		20mA
Operation display		LED On with Input On
External connection method		18 point Terminal strip connector (M3 X 6 screws)
Weight		0.13 kg

Circuit diagram

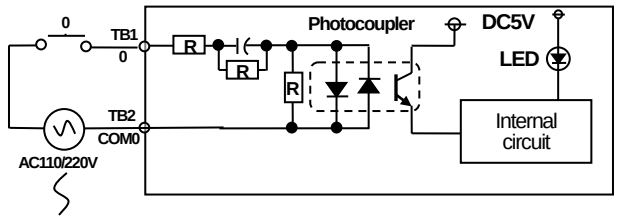

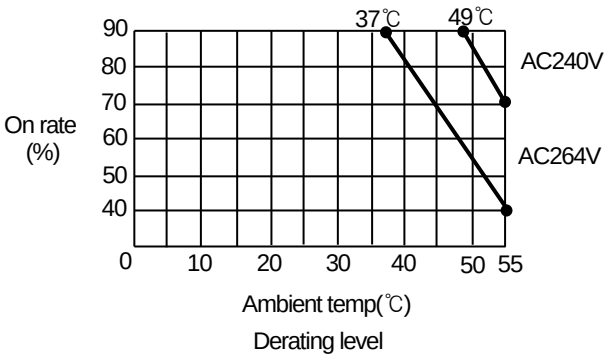

Derating level

Terminal block	Contact
TB1	0
TB2	COM0
TB3	1
TB4	COM1
TB5	2
TB6	COM2
TB7	3
TB8	COM3
TB9	4
TB10	COM4
TB11	5
TB12	COM5
TB13	6
TB14	COM6
TB15	7
TB16	COM7
TB17	NC
TB18	NC

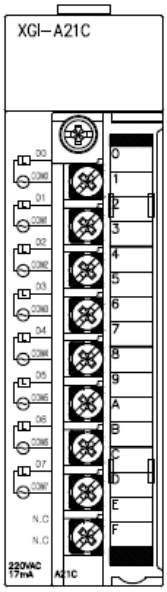

9.3 Digital Output Module Spec.

9.3.1 8 point relay output module

Spec. \ Module type		Relay output module XGQ-RY1A
Output point		8 points
Insulation method		Relay insulation
Rated load voltage/current		DC24V 2A(resistance load) / AC220V 2A(COSΨ = 1)
Min. load voltage / current		DC5V / 1mA
Max. load voltage / current		AC250V, DC125V
Leakage current at Off		0.1mA (AC220V, 60Hz)
Max. switching frequency		3,600 times/hr
Surge killer		None
Life	Mechanical	20 million and more times
	Electrical	Rated load voltage/current 100 thousand and more times
		AC200V / 1.5A, AC240V / 1A (COSΨ = 0.7) 100 thousand and more times
		AC200V / 1A, AC240V / 0.5A (COSΨ = 0.35) 100 thousand and more times
		DC24V / 1A, DC100V / 0.1A (L / R = 7ms) 100 thousand and more times
Response time	Off → On	10 ms and lower
	On → Off	12 ms and lower
Common method		1 point/ 1COM (Independent contact)
Current consumption		260mA (when every point is On)
Operation display		LED On with output On
External connection method		18 point Terminal strip connector (M3 X 6 screws)
Weight		0.13kg

Circuit diagram

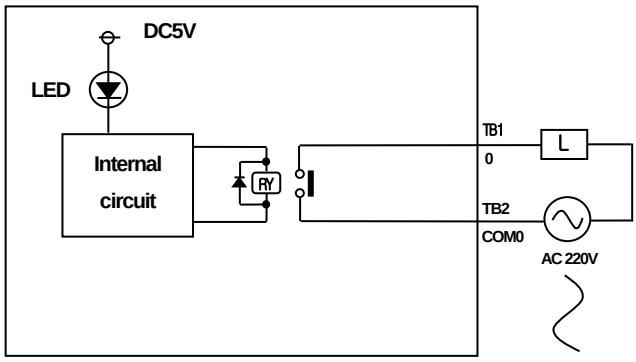

Terminal block	Contact
TB1	0
TB2	COM
TB3	1
TB4	COM
TB5	2
TB6	COM
TB7	3
TB8	COM
TB9	4
TB10	COM
TB11	5
TB12	COM
TB13	6
TB14	COM
TB15	7
TB16	COM
TB17	NC
TB18	NC

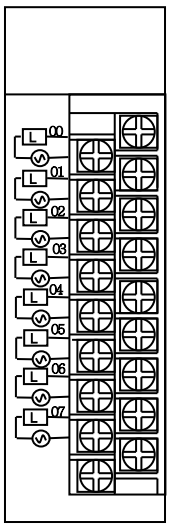

9.3.2 16 point relay output module

Spec. \ Module type		Relay output module XGQ-RY2A
Output point		16 points
Insulation method		Relay insulation
Rated load voltage/current		DC24V 2A(resistance load) / AC220V 2A(COSΨ = 1)
Min. load voltage / current		DC5V / 1mA
Max. load voltage / current		AC250V, DC125V
Leakage current at Off		0.1mA (AC220V, 60Hz)
Max. switching frequency		3,600 times/hr
Surge killer		None
Life	Mechanical	20 million and more times
	Electrical	Rated load voltage/current 100 thousand and more times
		AC200V / 1.5A, AC240V / 1A (COSΨ = 0.7) 100 thousand and more times
		AC200V / 1A, AC240V / 0.5A (COSΨ = 0.35) 100 thousand and more times
		DC24V / 1A, DC100V / 0.1A (L / R = 7ms) 100 thousand and more times
Response time	Off → On	10 ms and lower
	On → Off	12 ms and lower
Common method		16 point/ 1COM
Current consumption		500mA (when every point is On)
Operation display		LED On with output On
External connection method		18point Terminal strip connector (M3 X 6 screws)
Weight		0.17kg

Circuit diagram

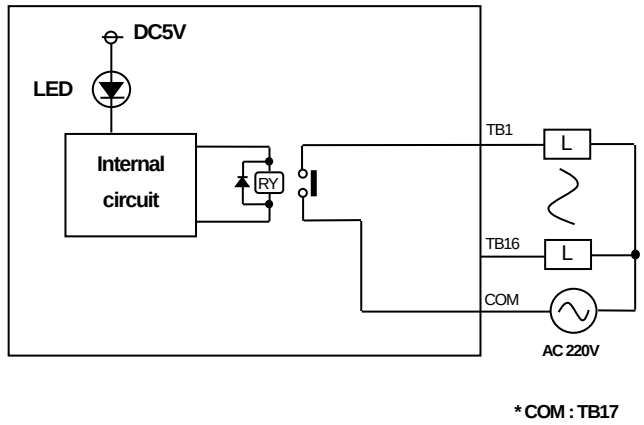

Terminal block	Contact
TB1	0
TB2	1
TB3	2
TB4	3
TB5	4
TB6	5
TB7	6
TB8	7
TB9	8
TB10	9
TB11	10
TB12	11
TB13	12
TB14	13
TB15	14
TB16	15
TB17	COM
TB18	NC

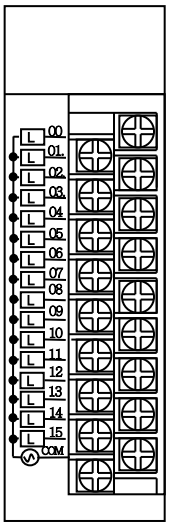

9.3.3 16 point relay output module (Surge Killer built-in type)

Module type / Spec.		Relay output module
		XGQ-RY2B
Output point		16 points
Insulation method		Relay insulation
Rated load voltage/current		DC24V 2A(resistance load) / AC220V 2A(COSΨ = 1)
Min. load voltage / current		DC5V / 1mA
Max. load voltage / current		AC250V, DC125V
Leakage current at Off		0.1mA (AC220V, 60Hz)
Max. switching frequency		3,600 times/hr
Surge killer		Varistor (387 ~ 473V), C.R absorber
Life	Mechanical	20 million and more times
	Electrical	Rated load voltage/current 100 thousand and more times
		AC200V / 1.5A, AC240V / 1A (COSΨ = 0.7) 100 thousand and more times
		AC200V / 1A, AC240V / 0.5A (COSΨ = 0.35) 100 thousand and more times
		DC24V / 1A, DC100V / 0.1A (L / R = 7ms) 100 thousand and more times
Response time	Off → On	10 ms and lower
	On → Off	12 ms and lower
Common method		16 point/ 1COM
Current consumption		500mA (when every point is On)
Operation display		LED On with output On
External connection method		18 point Terminal strip connector (M3 X 6 screws)
Weight		0.19kg

Circuit diagram

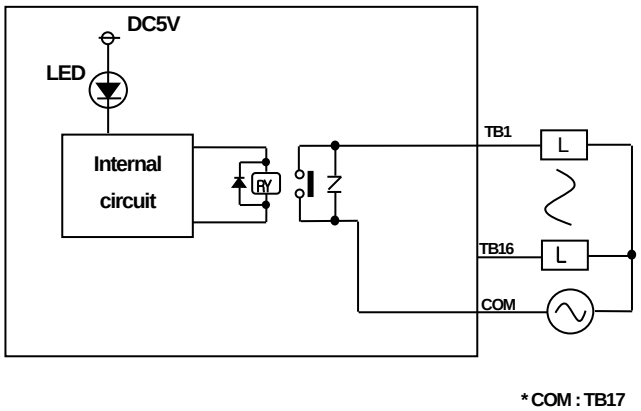

Terminal block	Contact
TB1	0
TB2	1
TB3	2
TB4	3
TB5	4
TB6	5
TB7	6
TB8	7
TB9	8
TB10	9
TB11	10
TB12	11
TB13	12
TB14	13
TB15	14
TB16	15
TB17	COM
TB18	NC

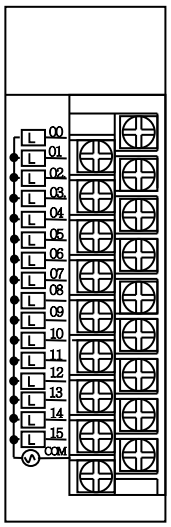

9.3.4 16 point Triac output module

Module type / Spec.		Triac output module
		XGQ-SS2A
Output point		16 points
Insulation method		Photo coupler insulation
Rated load voltage		AC 100-240V (50 / 60 Hz)
Max. load voltage		AC 264V
Max. load current		0.6A / 1 point, 4A / 1COM
Min. load current		20 mA
Leakage current at Off		2.5 mA (AC 220V 60 Hz)
Max. inrush current		20A / Cycle and lower
Max. voltage drop at On		AC 1.5V and lower (2A)
Surge killer		Varistor (387 ~ 473V), C.R absorber
Response time	Off → On	1 ms and shorter
	On → Off	0.5 Cycle + 1 ms and shorter
Common method		16 point/ 1 COM
Current consumption		300 mA (when every point is On)
Operation display		LED On with output On
External connection method		18point Terminal strip connector (M3 X 6 screw)
Weight		0.2 kg

Circuit diagram

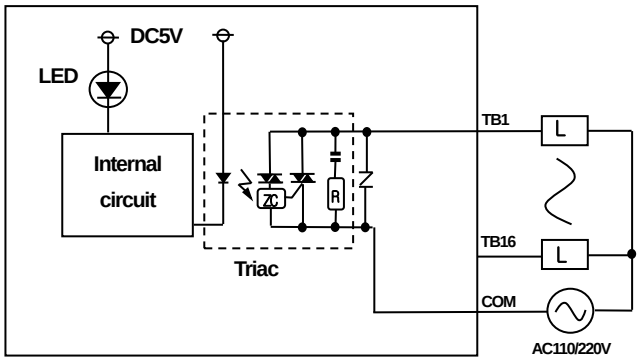

*COM : TB17

Terminal block	Contact
TB1	0
TB2	1
TB3	2
TB4	3
TB5	4
TB6	5
TB7	6
TB8	7
TB9	8
TB10	9
TB11	10
TB12	11
TB13	12
TB14	13
TB15	14
TB16	15
TB17	COM
TB18	NC

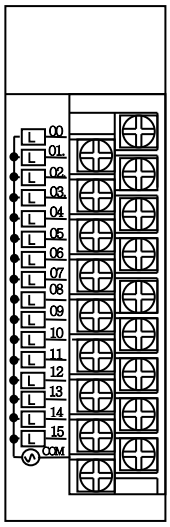

9.3.5 16 point transistor output module (sink type)

Spec. \ Module type		Transistor output module
		XGQ-TR2A
Output point		16 points
Insulation method		Photo coupler insulation
Rated load voltage		DC 12 / 24V
Operating load voltage range		DC 10.2 ~ 26.4V
Max. load current		0.5A / 1point, 4A / 1COM
Leakage current at Off		0.1mA and lower
Max. inrush current		4A / 10 ms and lower
Max. voltage drop at On		DC 0.3V AND LOWER
Surge killer		Zener diode
Fuse		4A×2(not replaceable)(Fuse cap.:50A)
Fuse disconnection display		Yes(If a fuse is burnt out, it transfers a signal to CPU and LED is on) If external power supply is off, fuse status is not detected.
Response time	Off → On	1 ms and shorter
	On → Off	1 ms and shorter (Rated load, resistance load)
Common method		16 point/ 1COM
Current consumption		70mA (when every point is On)
External power supply	Voltage	DC12/24V ± 10% (4 Vp-p and lower ripple voltage)
	Current	10mA and lower (if connected to DC24V)
Operation display		LED On with output On
External connection method		18point Terminal strip connector
Weight		0.11kg

Circuit diagram

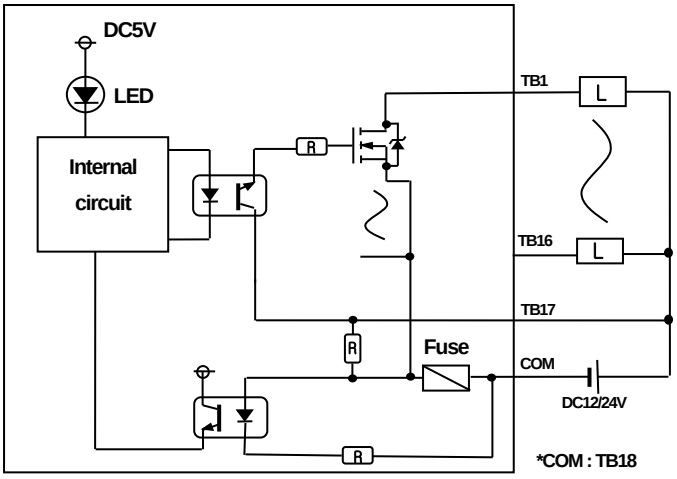

Terminal block	Contact
TB1	0
TB2	1
TB3	2
TB4	3
TB5	4
TB6	5
TB7	6
TB8	7
TB9	8
TB10	9
TB11	10
TB12	11
TB13	12
TB14	13
TB15	14
TB16	15
TB17	DC24V
TB18	COM

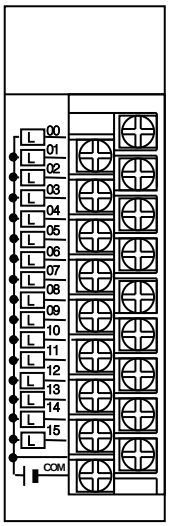

9.3.6 32 point transistor output module(sink type)

Spec. \ Module type		Transistor output module XGQ-TR4A
Output point		32 point
Insulation method		Photo coupler insulation
Rated load voltage		DC 12 / 24V
Operating load voltage range		DC 10.2 ~ 26.4V
Max. load current		0.1A / 1point, 2A / 1COM
Leakage current at Off		0.1mA and lower
Max. inrush current		0.7A / 10 ms and lower
Max. voltage drop at On		DC 0.2V and lower
Surge killer		Zener diode
Response time	Off → On	1 ms and shorter
	On → Off	1 ms and shorter (Rated load, resistance load)
Common method		32 points / 1COM
Current consumption		130mA (when every point is On)
External power supply	Voltage	DC12/24V ± 10% (4 Vp-p and lower ripple voltage)
	Current	10mA and lower (if connected to DC24V)
Operation display		LED On with Input On
External connection method		40 Pin Connector
Suitable cable size		0.3 ㎟
Weight		0.1 kg

Circuit diagram

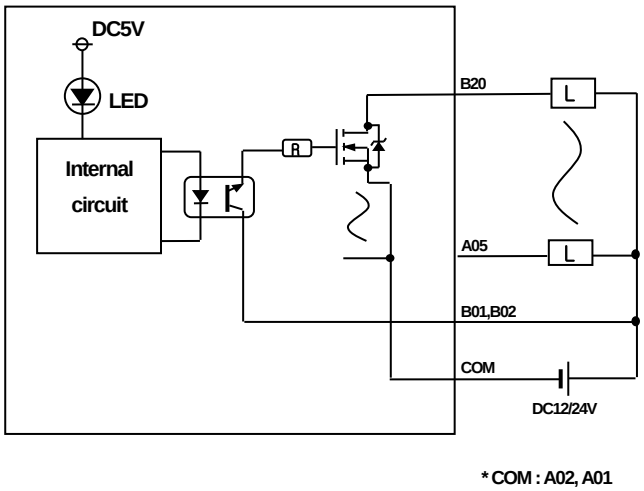

No	Contact	No	Contact
B20	0	A20	16
B19	1	A19	17
B18	2	A18	18
B17	3	A17	19
B16	4	A16	20
B15	5	A15	21
B14	6	A14	22
B13	7	A13	23
B12	8	A12	24
B11	9	A11	25
B10	10	A10	26
B09	11	A09	27
B08	12	A08	28
B07	13	A07	29
B06	14	A06	30
B05	15	A05	31
B04	NC	A04	NC
B03	NC	A03	NC
B02	DC12/ 24V	A02	COM
B01		A01	COM

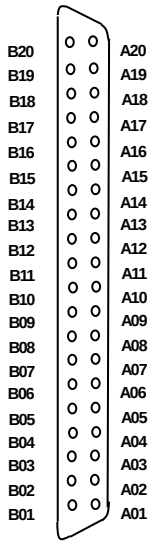

9.3.7 64 point transistor output module (sink type)

Spec. \ Module type		Transistor output module XGQ-TR8A
Output point		64 points
Insulation system		Photo coupler insulation
Rated load voltage		DC 12 / 24V
Operating load voltage range		DC 10.2 ~ 26.4V
Max. load current		0.1A / 1point, 2A / 1COM
Leakage current at Off		0.1mA and lower
Max. inrush current		0.7A / 10 ms and lower
Max. voltage drop at On		DC 0.2V and lower
Surge killer		Zener diode
Response time	Off → On	1 ms and shorter
	On → Off	1 ms and shorter (Rated load, resistance load)
Common method		16 point/ 1COM
Current consumption		230mA (when every point is On)
Common method		32 points / COM
External power supply	Voltage	DC12/24V ± 10% (4 Vp-p and lower ripple voltage)
	Current	10mA and lower (if connected to DC24V)
Operation display		LED On with Input On (32point LED on by switching)
External connection method		40 Pin Connector × 2
Suitable cable size		0.3 ㎟
Weight		0.15 kg

Circuit diagram

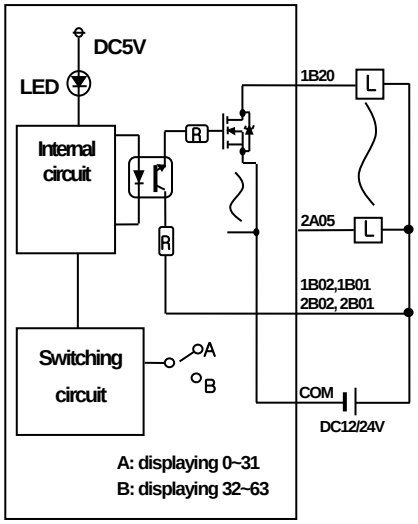

*COM : 1A02, 1A01
2A02, 2A01

No	Contact	No	Contact	No	Contact	No	Contact
1B20	0	1A20	16	2B20	32	2A20	48
1B19	1	1A19	17	2B19	33	2A19	49
1B18	2	1A18	18	2B18	34	2A18	50
1B17	3	1A17	19	2B17	35	2A17	51
1B16	4	1A16	20	2B16	36	2A16	52
1B15	5	1A15	21	2B15	37	2A15	53
1B14	6	1A14	22	2B14	38	2A14	54
1B13	7	1A13	23	2B13	39	2A13	55
1B12	8	1A12	24	2B12	40	2A12	56
1B11	9	1A11	25	2B11	41	2A11	57
1B10	10	1A10	26	2B10	42	2A10	58
1B09	11	1A09	27	2B09	43	2A09	59
1B08	12	1A08	28	2B08	44	2A08	60
1B07	13	1A07	29	2B07	45	2A07	61
1B06	14	1A06	30	2B06	46	2A06	62
1B05	15	1A05	31	2B05	47	2A05	63
1B04	NC	1A04	NC	2B04	NC	2A04	NC
1B03	NC	1A03	NC	2B03	NC	2A03	NC
1B02	12/24 VDC	1A02	COM1	2B02	12/24 VDC	2A02	COM2
1B01		1A01		2B01		2A01	

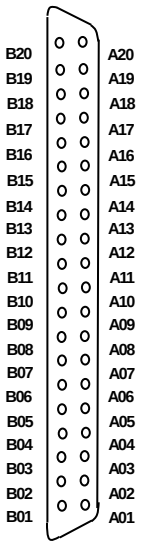

9.3.8 16 point transistor output module (source type)

Spec. \ Module type		Transistor output module
		XGQ-TR2B
Output point		16 points
Insulation method		Photo coupler insulation
Rated load voltage		DC 12 / 24V
Operating load voltage range		DC 10.2 ~ 26.4V
Max. load current		0.5A / 1point, 4A / 1COM
Leakage current at Off		0.1mA and lower
Max. inrush current		4A / 10 ms and lower
Max. voltage drop at On		DC 0.3V AND LOWER
Surge killer		Zener diode
Fuse		4A×2(not replaceable)(Fuse cap.:50A)
Fuse disconnection display		Yes(If a fuse is burnt out, it transfers a signal to CPU and LED is on)
Response time	Off → On	1 ms and shorter
	On → Off	1 ms and shorter (Rated load, resistance load)
Common method		16 point/ 1COM
Current consumption		70mA (when every point is On)
External power supply	Voltage	DC12/24V ± 10% (4 Vp-p and lower ripple voltage)
	Current	10mA and lower (if connected to DC24V)
Operation display		LED On with output On
External connection method		18point Terminal strip connector
Weight		0.12kg

Circuit diagram

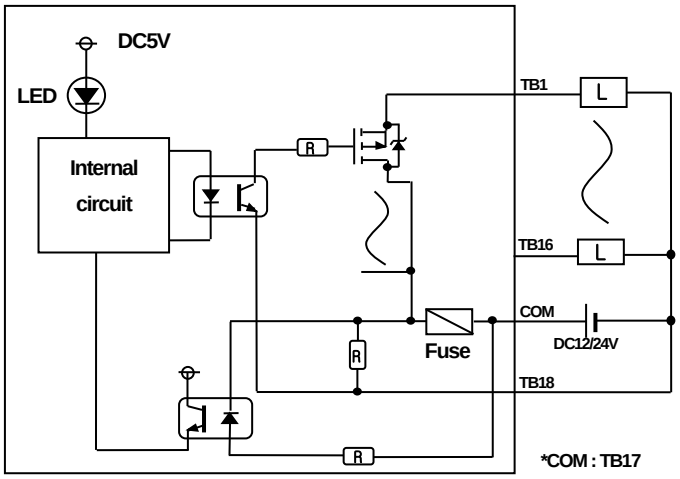

Terminal block	Contact
TB1	0
TB2	1
TB3	2
TB4	3
TB5	4
TB6	5
TB7	6
TB8	7
TB9	8
TB10	9
TB11	10
TB12	11
TB13	12
TB14	13
TB15	14
TB16	15
TB17	COM
TB18	0V

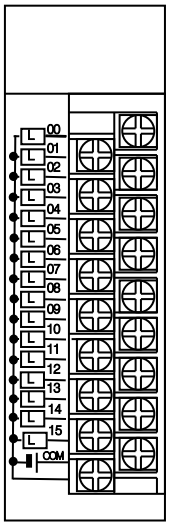

9.3.9 32 point transistor output module (source type)

Spec. \ Module type		Transistor output module XGQ-TR4B
Output point		32 points
Insulation method		Photo coupler insulation
Rated load voltage		DC 12 / 24V
Operating load voltage range		DC 10.2 ~ 26.4V
Max. load current		0.1A / 1point, 2A / 1COM
Leakage current at Off		0.1mA and lower
Max. inrush current		4A / 10 ms and lower
Max. voltage drop at On		DC 0.3V AND LOWER
Surge killer		Zener diode
Response time	Off → On	1 ms and shorter
	On → Off	1 ms and shorter (Rated load, resistance load)
Common method		32points / 1COM
Current consumption		130mA (when every point is On)
External power supply	Voltage	DC12/24V ± 10% (4 Vp-p and lower ripple voltage)
	Current	10mA and lower (if connected to DC24V)
Operation display		LED On with Input On
External connection method		40 Pin Connector
Suitable cable size		0.3 ㎟
Weight		0.1 kg

Circuit diagram

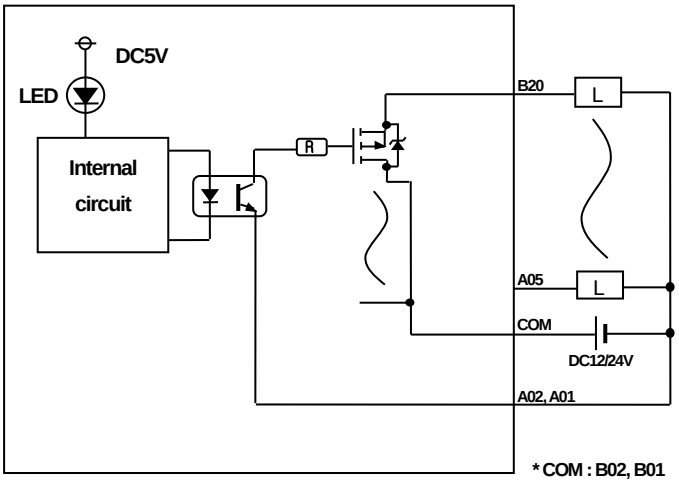

No	Contact	No	Contact
B20	0	A20	16
B19	1	A19	17
B18	2	A18	18
B17	3	A17	19
B16	4	A16	20
B15	5	A15	21
B14	6	A14	22
B13	7	A13	23
B12	8	A12	24
B11	9	A11	25
B10	10	A10	26
B09	11	A09	27
B08	12	A08	28
B07	13	A07	29
B06	14	A06	30
B05	15	A05	31
B04	NC	A04	NC
B03	NC	A03	NC
B02	COM	A02	0V
B01		A01	

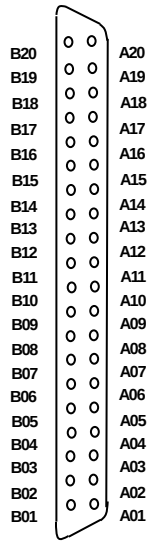

9.3.10 64 point transistor output module (source type)

Spec. \ Module type		Transistor output module
		XGQ-TR8B
Output point		64 points
Insulation method		Photo coupler insulation
Rated load voltage		DC 12 / 24V
Operating load voltage range		DC 10.2 ~ 26.4V
Max. load current		0.1A / 1point, 2A / 1COM
Leakage current at Off		0.1mA and lower
Max. inrush current		4A / 10 ms and lower
Max. voltage drop at On		DC 0.3V and lower
Surge killer		Zener diode
Response time	Off → On	1 ms and shorter
	On → Off	1 ms and shorter (Rated load, resistance load)
Common method		32point / 1COM
Current consumption		230mA (when every point is On)
Common method		32point / COM
External power supply	Voltage	DC12/24V ± 10% (4 Vp-p and lower ripple voltage)
	Current	10mA and lower (if connected to DC24V)
Operation display		LED On with Input On (32 point LED ON by switching)
External connection method		40 Pin Connector × 2
Suitable cable size		0.3 ㎟
Weight		0.15 kg

Circuit diagram

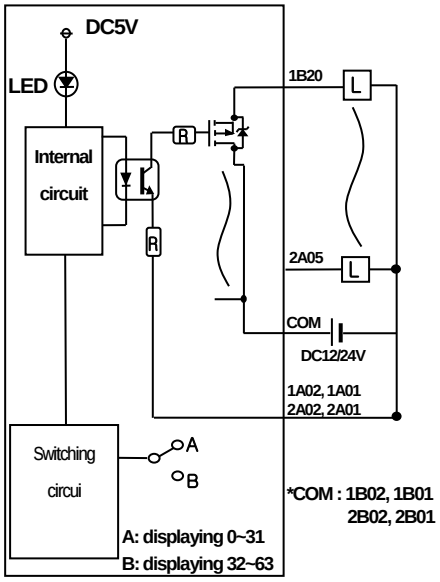

No	Contact	No	Contact	No	Contact	No	Contact
1B20	0	1A20	16	2B20	32	2A20	48
1B19	1	1A19	17	2B19	33	2A19	49
1B18	2	1A18	18	2B18	34	2A18	50
1B17	3	1A17	19	2B17	35	2A17	51
1B16	4	1A16	20	2B16	36	2A16	52
1B15	5	1A15	21	2B15	37	2A15	53
1B14	6	1A14	22	2B14	38	2A14	54
1B13	7	1A13	23	2B13	39	2A13	55
1B12	8	1A12	24	2B12	40	2A12	56
1B11	9	1A11	25	2B11	41	2A11	57
1B10	10	1A10	26	2B10	42	2A10	58
1B09	11	1A09	27	2B09	43	2A09	59
1B08	12	1A08	28	2B08	44	2A08	60
1B07	13	1A07	29	2B07	45	2A07	61
1B06	14	1A06	30	2B06	46	2A06	62
1B05	15	1A05	31	2B05	47	2A05	63
1B04	NC	1A04	NC	2B04	NC	2A04	NC
1B03	NC	1A03	NC	2B03	NC	2A03	NC
1B02	COM	1A02	0V	2B02	COM	2A02	0V
1B01		1A01		2B01		2A01	

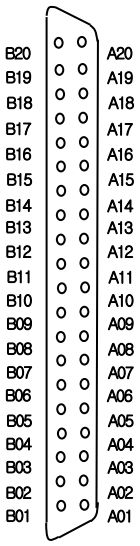

9.3.11 8 point transistor isolated output module

Spec. \ Module type		Transistor output module
		XGQ-TR1C
Output point		8 points
Insulation method		Photo coupler insulation
Rated load voltage		DC 12 / 24V
Operating load voltage range		DC 10.2 ~ 26.4V
Max. load current		2A / 1 point
Leakage current at Off		0.1mA and lower
Max. inrush current		4A / 10 ms and lower
Max. voltage drop at On		DC 0.3V and lower
Surge killer		Zener diode
Response time	Off → On	3 ms and shorter
	On → Off	10 ms and shorter (Rated load, resistance load)
Common method		1 point/ 1COM
Current consumption		100mA (when every points On)
External power supply	Voltage	DC12/24V ± 10% (4 Vp-p and lower ripple voltage)
	Current	10mA and lower (if connected to DC24V)
Operation display		LED On with output On
External connection method		18point Terminal strip connector
Weight		0.11kg

Circuit diagram

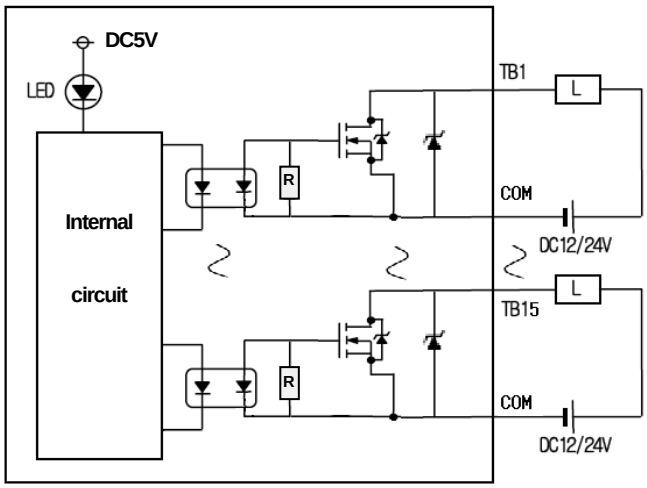

Terminal block	Contact
TB1	P0
TB2	COM0
TB3	P1
TB4	COM1
TB5	P2
TB6	COM2
TB7	P3
TB8	COM3
TB9	P4
TB10	COM4
TB11	P5
TB12	COM5
TB13	P6
TB14	COM6
TB15	P7
TB16	COM7
TB17	NC
TB18	NC

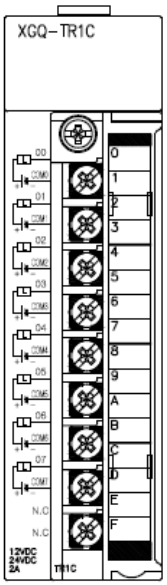

9.4 Digital I/O Module Specifications

9.4.1 32 point (DC input · transistor output) I/O combined module

XGH-DT4A					
Input			Output		
Input point		16 points	Output point		16 points
Insulation method		Photo coupler insulation	Insulation method		Photo coupler insulation
Rated input voltage		DC 24V	Rated load voltage		DC 12 / 24V
Rated input current		Approx. 4 ㎃	Operating load voltage range		DC 10.2 ~ 26.4V
Operating voltage range		DC20.4~28.8V (5% and lower ripple rate)	Max. load current		0.1A / 1point, 1.6A / 1COM
Withstand voltage		AC560Vrms/3Cycle(altitude2000m)	Leakage current at Off		0.1mA and lower
On voltage/On current		DC 19V and higher / 3mA and higher	Max. inrush current		0.7A / 10 ms and lower
Off voltage/Off current		DC 11V and lower / 1.7mA and lower	Surge killer		Zener diode
Input resistance		Approx. 5.6 kΩ	Max. voltage drop at On		DC 0.2V and lower
Response time	Off→ On	1ms/3ms/5ms/10ms/20ms/70ms/ 100ms(set by CPU parameter) Initial value:3ms	Response time	Off→ On	1 ms and shorter
	On → Off	1ms/3ms/5ms/10ms/20ms/70ms/ 100ms(set by CPU parameter) Initial value:3ms		On → Off	1 ms and shorter (Rated load, resistance load)
Common method		16 point/ COM	Common method		16 point/ 1COM
Operation display		LED On with input On	Operation display		LED On with output On
Current consumption(㎃)		110mA (when ever point is on)			
External connection method		40 Pin Connector × 1			
Weight		0.1 kg			

External connection

Input

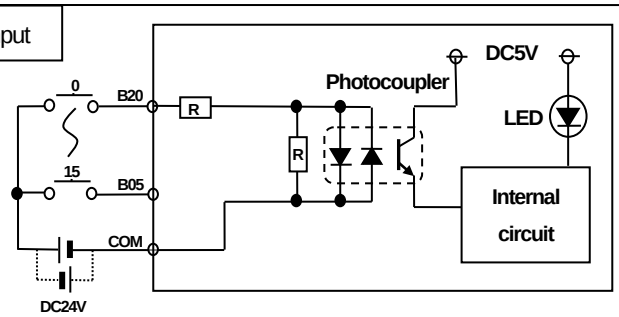

* COM : B02, B01

Output

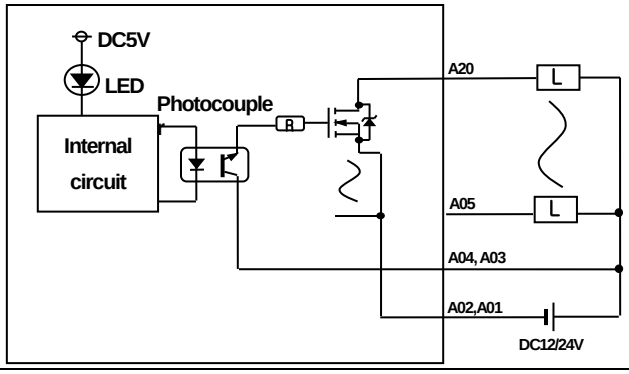

No	Contact	No	Contact
B20	0	A20	16
B19	1	A19	17
B18	2	A18	18
B17	3	A17	19
B16	4	A16	20
B15	5	A15	21
B14	6	A14	22
B13	7	A13	23
B12	8	A12	24
B11	9	A11	25
B10	10	A10	26
B09	11	A09	27
B08	12	A08	28
B07	13	A07	29
B06	14	A06	30
B05	15	A05	31
B04	NC	A04	DC12 /24V
B03	NC	A03	
B02	COM	A02	0V
B01		A01	

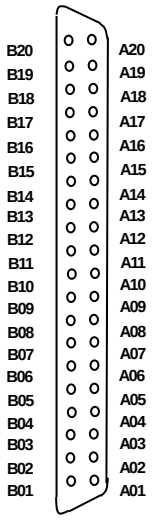

9.5 Event Input Module

9.5.1 Event Input Module (Source/Sink type)

Specification		XGF-SOEA
Input point		32 point
Insulation method		Photo coupler insulation
Memory size		Records 1Mbit event information (300 event information per XGF-SOEA module)
Precision		1 ms (±2ms : error between modules)
Rated input voltage		DC24V
Rated input current		About 4mA
Used voltage range		DC20.4 ~ 28.8V (within ripple rate 5%)
On voltage/On current		DC19V or above / 3 mA or above
Off voltage/ Off current		DC11V or less / 1.7 mA or less
Input resistance		About 5.6 kΩ
Response time	Off → On	H/W delay (10㎲: Normal) + input filter time (user setting: 0~100ms) + CPU scan time delay (50㎲)
	On → Off	H/W delay (84㎲: Normal) + input filter time (user setting: 0~100ms) + CPU scan time delay (50㎲)
Working voltage		AC560V rms/3 Cycle (Altitude 2000m)
Insulation resistance		Insulation resistance 10 ㏁ or above (DC500V)
COMM method		32 point / COM
Current consumption (A)		0.7(MAX)
Operation indicator		LED is on when input is on
External connection method		40 pin connector
Size		27x98x90
Weight		0.2 kg

Circuit configuration

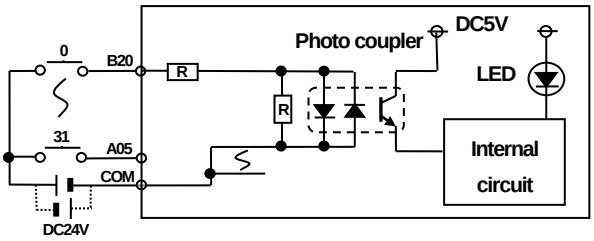

* COM : B02, B01

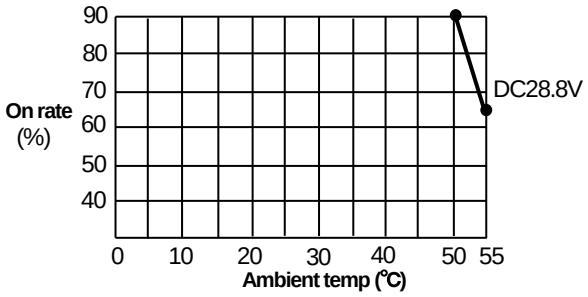

Derating diagram

No	Contact	No	Contact
B20	0	A20	16
B19	1	A19	17
B18	2	A18	18
B17	3	A17	19
B16	4	A16	20
B15	5	A15	21
B14	6	A14	22
B13	7	A13	23
B12	8	A12	24
B11	9	A11	25
B10	10	A10	26
B09	11	A09	27
B08	12	A08	28
B07	13	A07	29
B06	14	A06	30
B05	15	A05	31
B04	RX+	A04	SG
B03	RX-	A03	SG
B02	COM	A02	COM
B01	COM	A01	COM

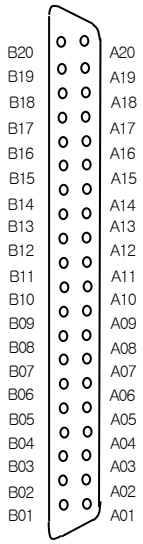

9.6 Smart Link

9.6.1 Modules accessible to Smart Link

From digital I/O modules used for XGT Series, the modules accessible to Smart Link are as follows.
32 point modules need a Connector(40 Pin x 1), 64 point modules need 2 connectors(40 Pin x 2)

Model	Specification	No. of Pins
XGI-D24A/B	DC input 32 point module	40 Pin Connector × 1
XGI-D28A/B	DC input 64 point module	40 Pin Connector × 2
XGQ-TR4A	TR output 32 point module(sink type)	40 Pin Connector × 1
XGQ-TR8A	TR output 64 point module(sink type)	40 Pin Connector × 2
XGQ-TR4B	TR output 32 point module(source type)	40 Pin Connector × 1
XGQ-TR8B	TR output 64 point module(source type)	40 Pin Connector × 2
XGF-SOEA	Event input module	40 Pin Connector × 1

9.6.2 Smart Link Components

The company prepares smart link products for the convenience of using our Connector type I/O modules.
For further information, please refer to the data sheet contained in a smart link product.
(Refer to 7.6.6 to confirm the differences between TG7-1H40CA and TG7-1H40S)

	Model	Cable	Length of Cable
Terminal board	TG7-1H40S	C40HF-05PB-1B	0.5m
		C40HF-10PB-1B	1m
		C40HF-15PB-1B	1.5m
		C40HF-20PB-1B	2m
		C40HF-30PB-1B	3m
	TG7-1H40CA (Common 20Pin Added)	C40HF-05PB-1B	0.5m
		C40HF-10PB-1B	1m
		C40HF-15PB-1B	1.5m
		C40HF-20PB-1B	2m
		C40HF-30PB-1B	3m
Relay board	R32C-NS5A-40P (Sink type)	C40HF-05PB-1	0.5m
		C40HF-10PB-1	1m
		C40HF-15PB-1	1.5m
		C40HF-20PB-1	2m
		C40HF-30PB-1	3m
	R32C-PS5A-40P (Source type)	C40HF-05PB-XGP1	0.5m
		C40HF-10PB-XGP1	1m
		C40HF-20PB-XGP1	2m

9.6.3 Smart Link Mapping Table

❶ : Module using 1ea Cable ❷ : Module using 2ea Cable

LS Smart Link Mapping Table				XGT PLC (Digital I/O Module)								
			Length (m)	XGQ-TR4A	XGQ-TR4B	XGQ-TR8A	XGQ-TR8B	XGI-D24A	XGI-D24B	XGI-D28A	XGI-D28B	XGI-SOEA
	Cable	Description	Sets	1	1	2	2	1	1	2	2	1
TG7-1H40S /TG7-1H40CA	C40HF-05PB-1B	PLC,CABLE ASS'Y,40p-40p,0.5m	0.5	❶	❶	❷	❷	❶	❶	❷	❷	❶
	C40HF-10PB-1B	PLC,CABLE ASS'Y,40p-40p,1m	1.0	❶	❶	❷	❷	❶	❶	❷	❷	❶
	C40HF-15PB-1B	PLC,CABLE ASS'Y,40p-40p,1.5m	1.5	❶	❶	❷	❷	❶	❶	❷	❷	❶
	C40HF-20PB-1B	PLC,CABLE ASS'Y,40p-40p,2m	2.0	❶	❶	❷	❷	❶	❶	❷	❷	❶
	C40HF-30PB-1B	PLC,CABLE ASS'Y,40p-40p,3m	3.0	❶	❶	❷	❷	❶	❶	❷	❷	❶
R32C-NS5A-40P (SINK)	C40HF-05PB-1	PLC,CABLE ASS'Y,40p-40p,0.5m	0.5	❶		❷						
	C40HF-10PB-1	PLC,CABLE ASS'Y,40p-40p,1m	1.0	❶		❷						
	C40HF-15PB-1	PLC,CABLE ASS'Y,40p-40p,1.5m	1.5	❶		❷						
	C40HF-20PB-1	PLC,CABLE ASS'Y,40p-40p,2m	2.0	❶		❷						
	C40HF-30PB-1	PLC,CABLE ASS'Y,40p-40p,3m	3.0	❶		❷						
R32C-PS5A-40P (Source)	C40HF-05PB-XGP1	PLC,CABLE ASS'Y,40p-40p,0.5m	0.5		❶		❷					
	C40HF-10PB-XGP1	PLC,CABLE ASS'Y,40p-40p,1m	1.0		❶		❷					
	C40HF-15PB-XGP1	PLC,CABLE ASS'Y,40p-40p,1.5m	1.5									
	C40HF-20PB-XGP1	PLC,CABLE ASS'Y,40p-40p,2m	2.0		❶		❷					
	C40HF-30PB-XGP1	PLC,CABLE ASS'Y,40p-40p,3m	3.0									

9.6.4 Smart Link Connection

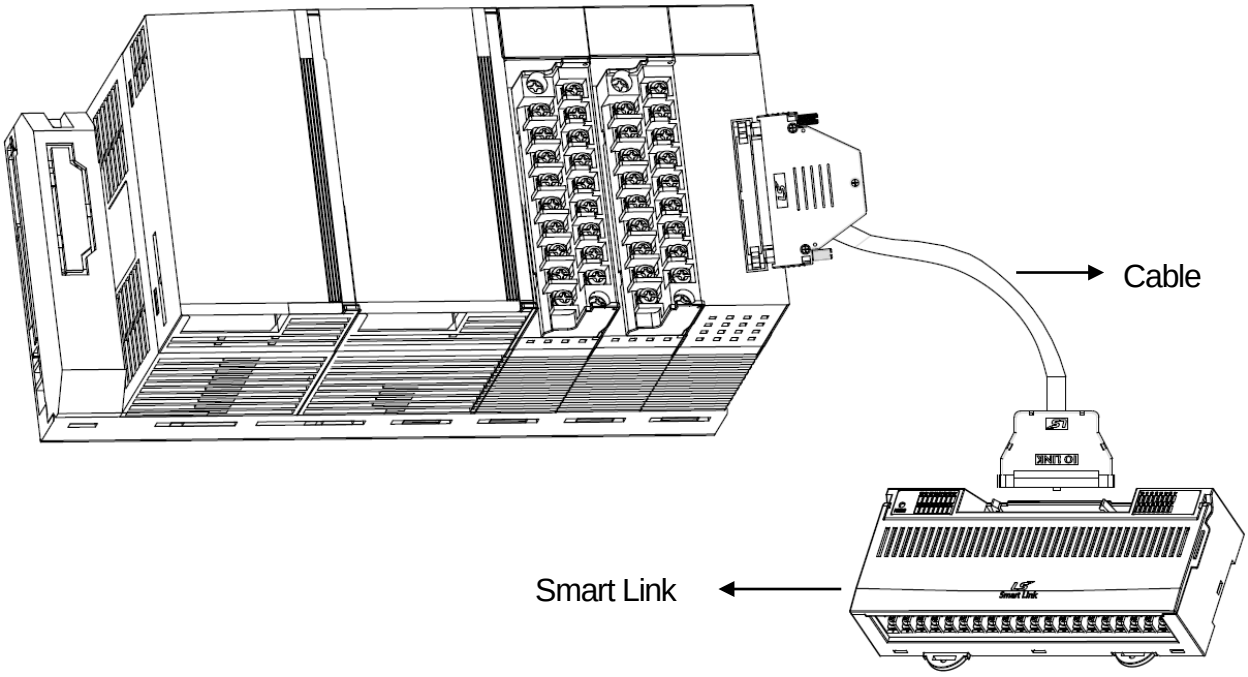

9.6.5 Smart Link Connection Diagram

(1) XGI-D24A/B

1) Applicable Smart Link

	Model	Cable	Length of Cable
Terminal board	TG7-1H40S	C40HF-05PB-1B	0.5m
		C40HF-10PB-1B	1m
		C40HF-15PB-1B	1.5m
		C40HF-20PB-1B	2m
		C40HF-30PB-1B	3m
	TG7-1H40CA (Common 20Pin Added)	C40HF-05PB-1B	0.5m
		C40HF-10PB-1B	1m
		C40HF-15PB-1B	1.5m
		C40HF-20PB-1B	2m
		C40HF-30PB-1B	3m

2) Connection Diagram (XGI-D24A/B)

(a) TG7-1H40S

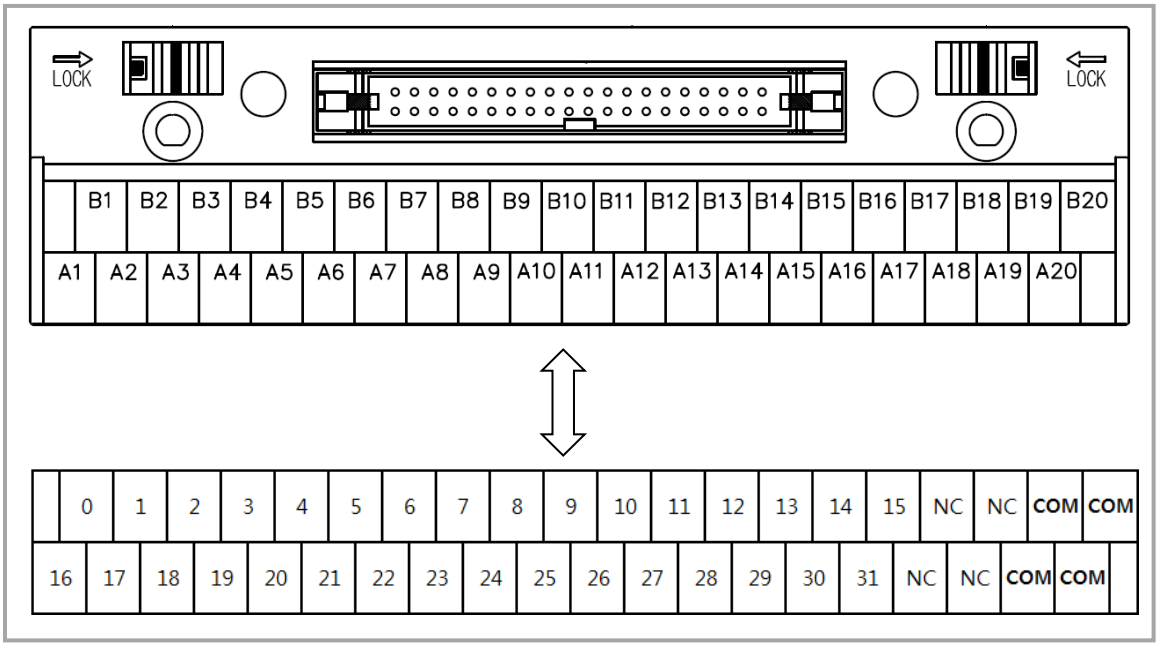

(b) TG7-1H40CA

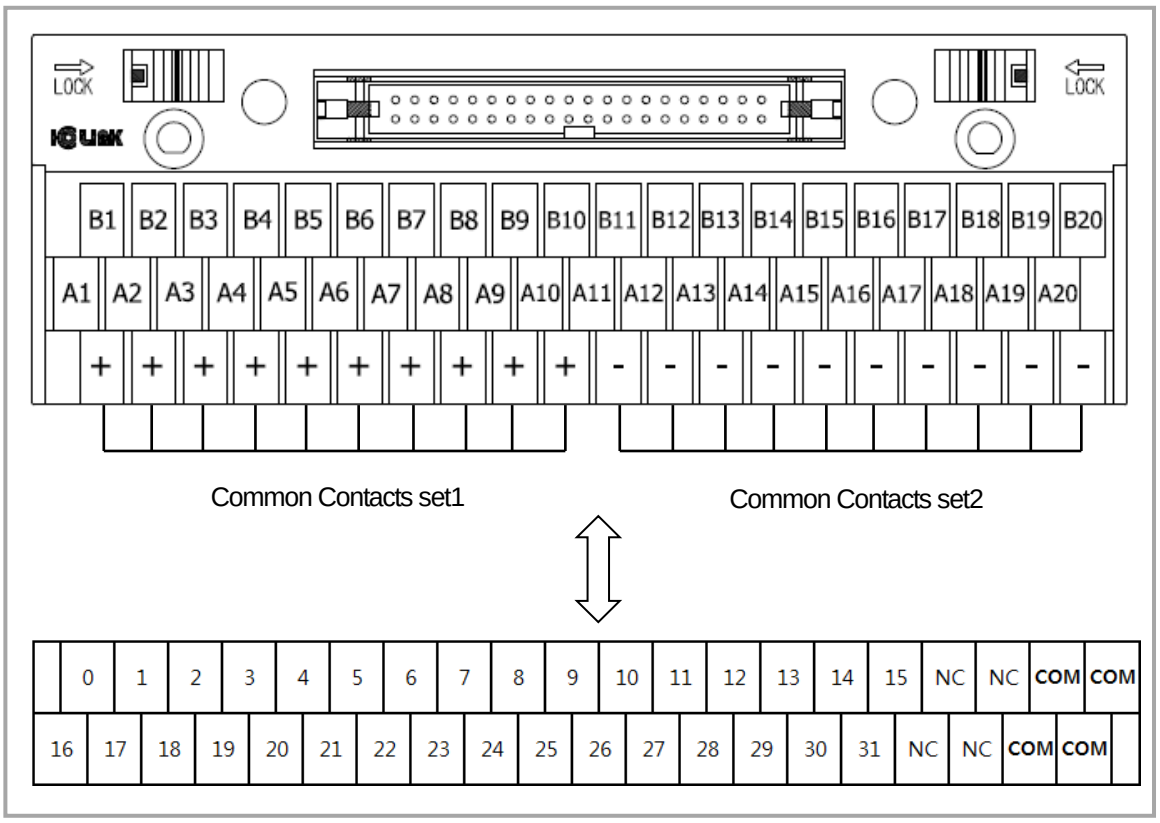
LOCK
LOCK
B1 B2 B3 B4 B5 B6 B7 B8 B9 B10 B11 B12 B13 B14 B15 B16 B17 B18 B19 B20
A1 A2 A3 A4 A5 A6 A7 A8 A9 A10 A11 A12 A13 A14 A15 A16 A17 A18 A19 A20
+ + + + + + + + + + - - - - - - - - - -
Common Contacts set1
Common Contacts set2
0 1 2 3 4 5 6 7 8 9 10 11 12 13 14 15 NC NC COM COM
16 17 18 19 20 21 22 23 24 25 26 27 28 29 30 31 NC NC COM COM

(2) XGI-D28A/B

1) Applicable Smart Link

	Model	Cable	Length of Cable
Terminal board	TG7-1H40S	C40HF-05PB-1B	0.5m
		C40HF-10PB-1B	1m
		C40HF-15PB-1B	1.5m
		C40HF-20PB-1B	2m
		C40HF-30PB-1B	3m
	TG7-1H40CA (Common 20Pin Added)	C40HF-05PB-1B	0.5m
		C40HF-10PB-1B	1m
		C40HF-15PB-1B	1.5m
		C40HF-20PB-1B	2m
		C40HF-30PB-1B	3m

2) Connection Diagram (XGI-D28A/B)

(a) TG7-1H40S

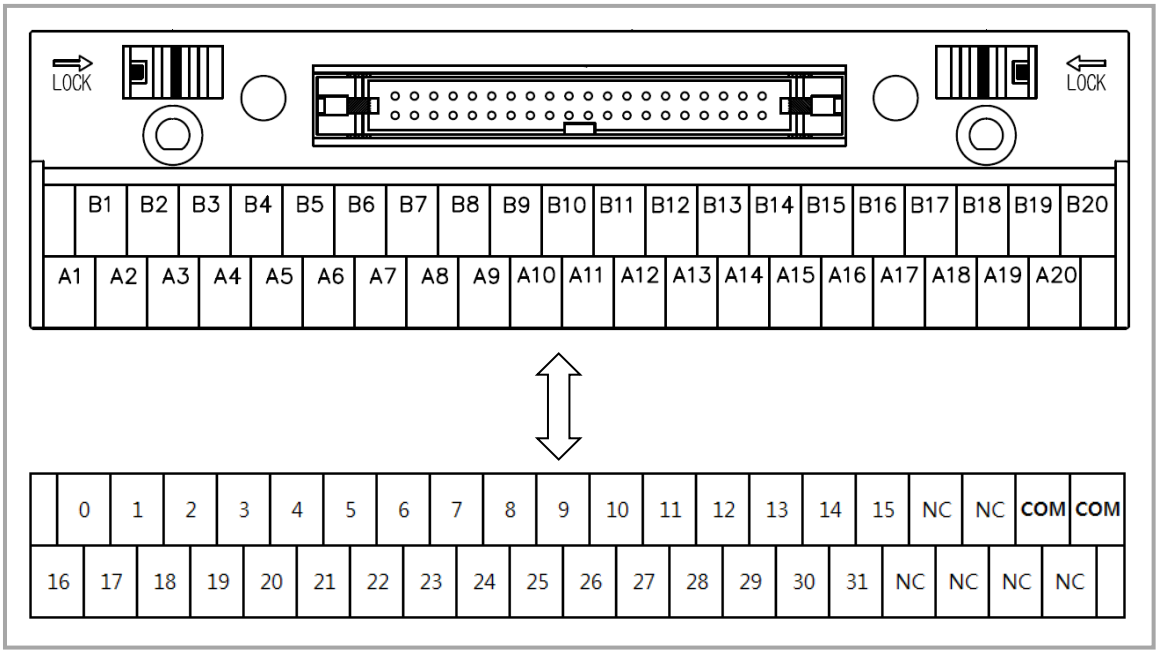

(b) TG7-1H40CA

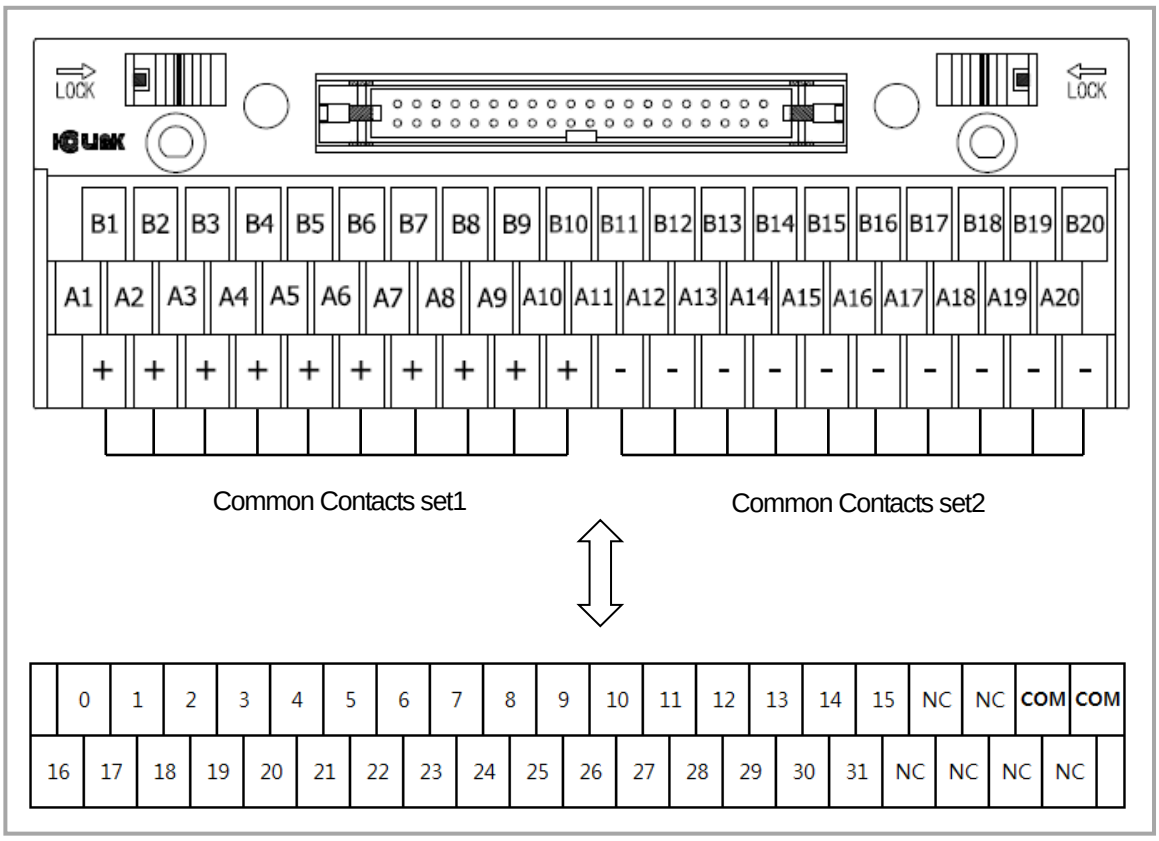
LOCK
LOCK
B1 B2 B3 B4 B5 B6 B7 B8 B9 B10 B11 B12 B13 B14 B15 B16 B17 B18 B19 B20
A1 A2 A3 A4 A5 A6 A7 A8 A9 A10 A11 A12 A13 A14 A15 A16 A17 A18 A19 A20
+ + + + + + + + + + - - - - - - - - - -
Common Contacts set1
Common Contacts set2
0 1 2 3 4 5 6 7 8 9 10 11 12 13 14 15 NC NC COM COM
16 17 18 19 20 21 22 23 24 25 26 27 28 29 30 31 NC NC NC NC

(3) XGQ-TR4A/8A

1) Applicable Smart Link

	Model	Cable	Length of Cable
Terminal board	TG7-1H40S	C40HF-05PB-1B	0.5m
		C40HF-10PB-1B	1m
		C40HF-15PB-1B	1.5m
		C40HF-20PB-1B	2m
		C40HF-30PB-1B	3m
	TG7-1H40CA (Common 20Pin Added)	C40HF-05PB-1B	0.5m
		C40HF-10PB-1B	1m
		C40HF-15PB-1B	1.5m
		C40HF-20PB-1B	2m
		C40HF-30PB-1B	3m
Relay board	R32C-NS5A-40P (Sink type)	C40HF-05PB-1	0.5m
		C40HF-10PB-1	1m
		C40HF-15PB-1	1.5m
		C40HF-20PB-1	2m
		C40HF-30PB-1	3m

2) Connection Diagram (XGQ-TR4A/8A)

(a) TG7-1H40S

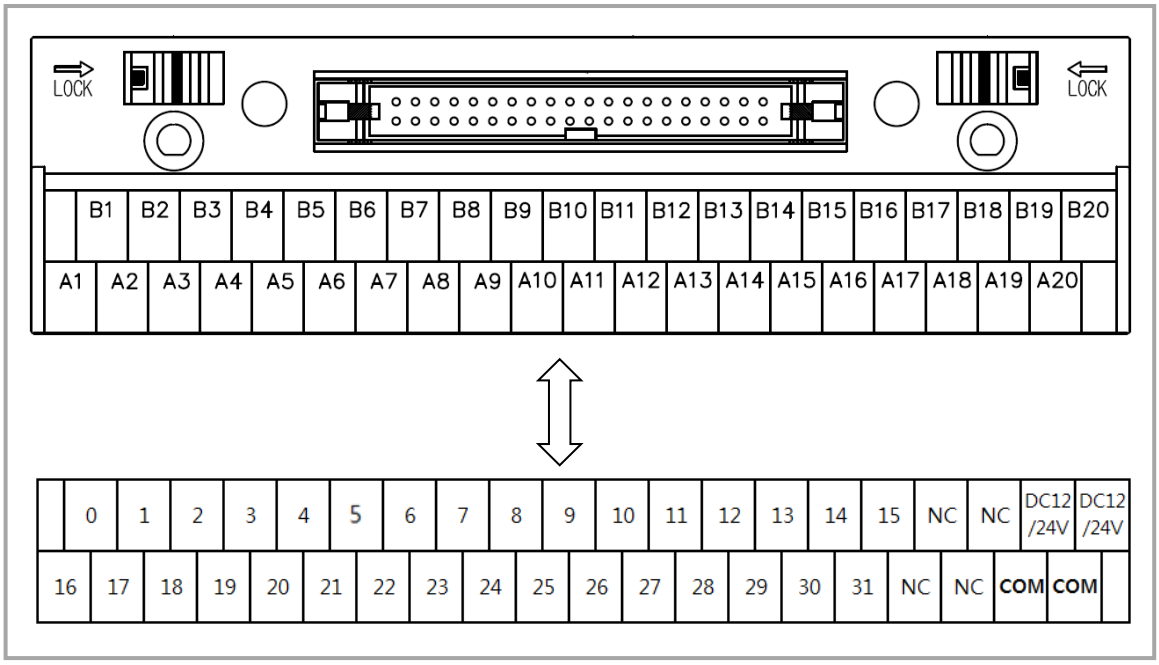

(b) TG7-1H40CA

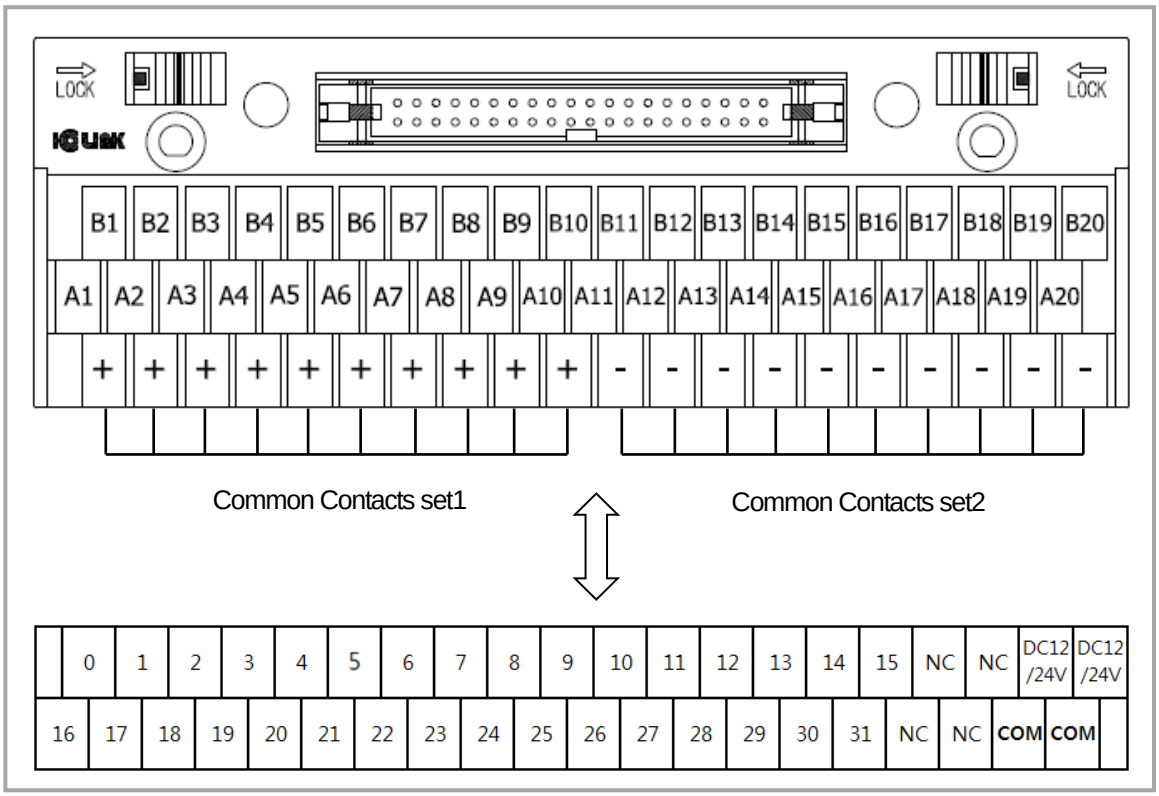

(c) R32C-NS5A-40P

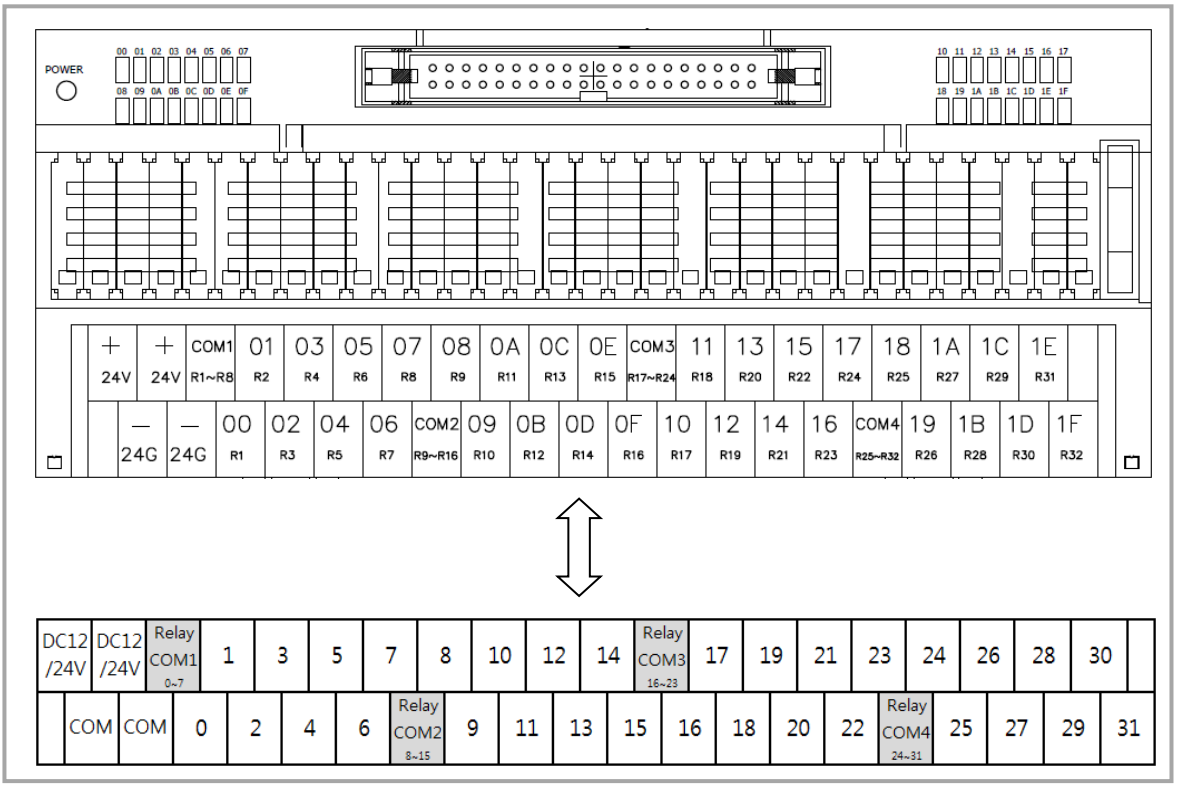

(4) XGQ-TR4B/8B

1) Applicable Smart Link

	Model	Cable	Length of Cable
Terminal board	TG7-1H40S	C40HF-05PB-1B	0.5m
		C40HF-10PB-1B	1m
		C40HF-15PB-1B	1.5m
		C40HF-20PB-1B	2m
		C40HF-30PB-1B	3m
	TG7-1H40CA (Common 20Pin Added)	C40HF-05PB-1B	0.5m
		C40HF-10PB-1B	1m
		C40HF-15PB-1B	1.5m
		C40HF-20PB-1B	2m
		C40HF-30PB-1B	3m
Relay board	R32C-PS5A-40P (Source type)	C40HF-05PB-XGP1	0.5m
		C40HF-10PB-XGP1	1m
		C40HF-20PB-XGP1	2m
		-	-
		-	-

2) Connection Diagram (XGQ-TR4B/8B)

(a) TG7-1H40S

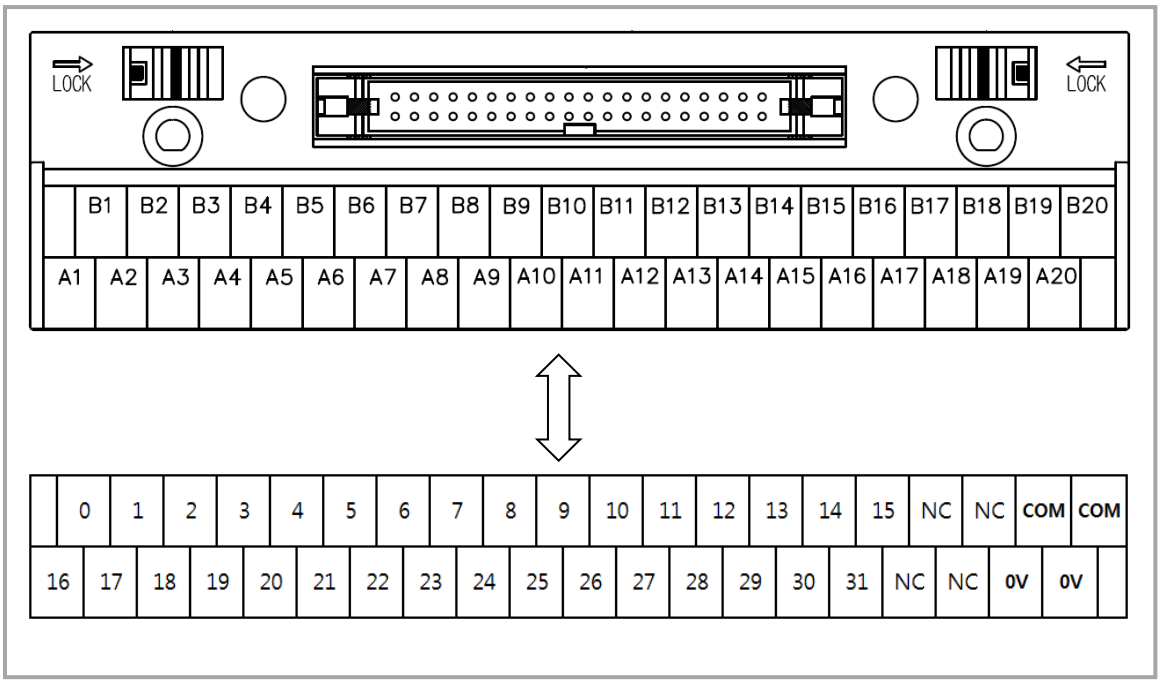

(b) TG7-1H40CA

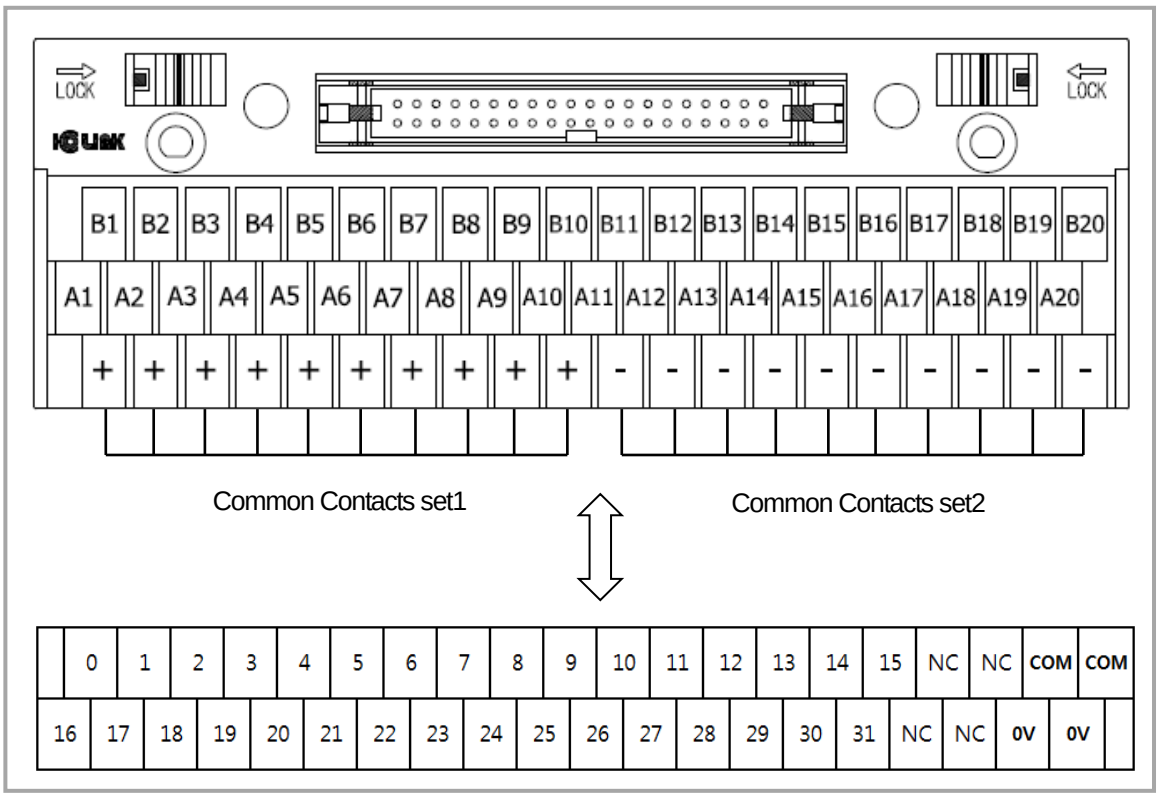

(c) R32C-PS5A-40P

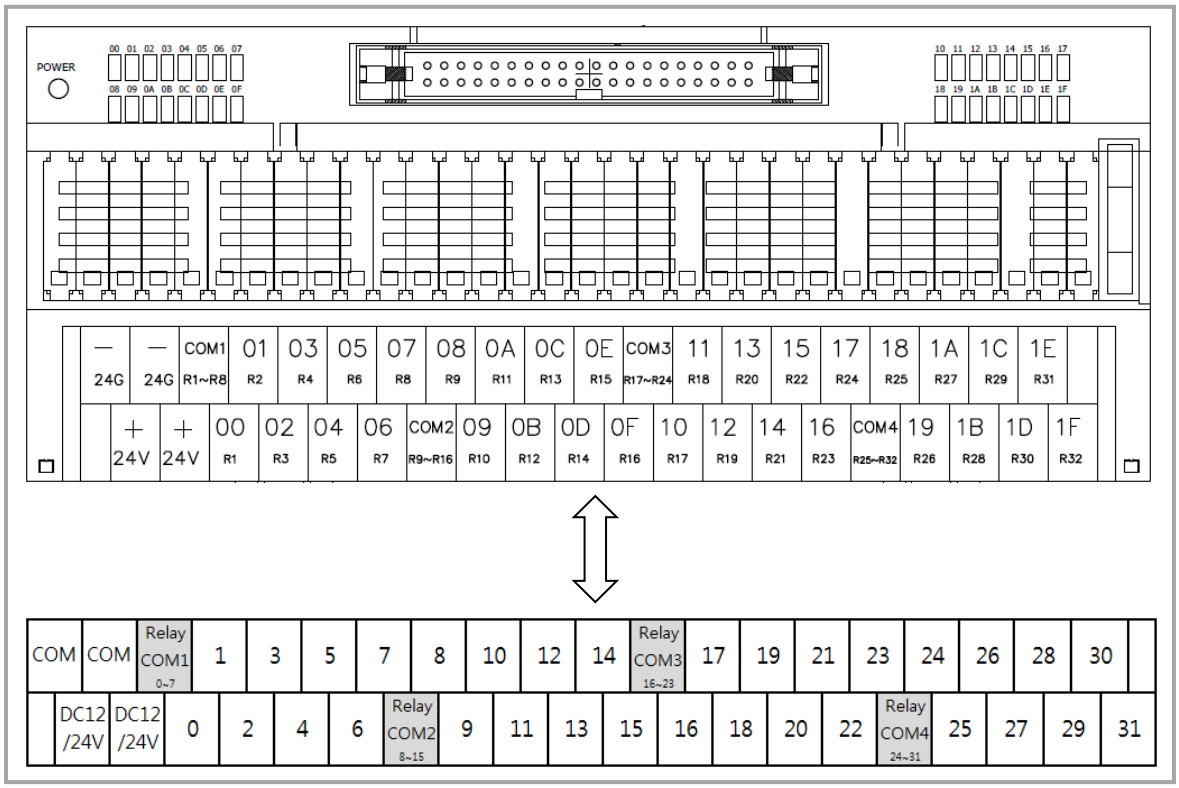

(5) XGF-SOEA

1) Applicable Smart Link

	Model	Cable	Length of Cable
Terminal board	TG7-1H40S	C40HF-05PB-1B	0.5m
		C40HF-10PB-1B	1m
		C40HF-15PB-1B	1.5m
		C40HF-20PB-1B	2m
		C40HF-30PB-1B	3m
	TG7-1H40CA (Common 20Pin Added)	C40HF-05PB-1B	0.5m
		C40HF-10PB-1B	1m
		C40HF-15PB-1B	1.5m
		C40HF-20PB-1B	2m
		C40HF-30PB-1B	3m

2) Connection Diagram (XGF-SOEA)

(a) TG7-1H40S

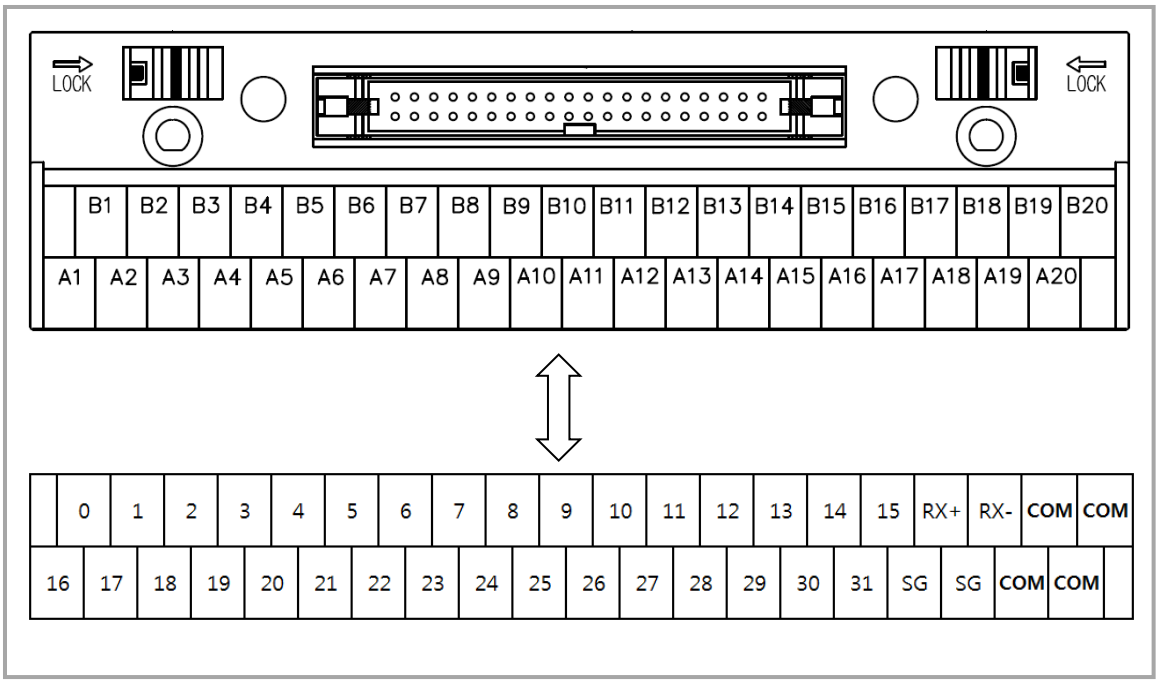

(b) TG7-1H40CA

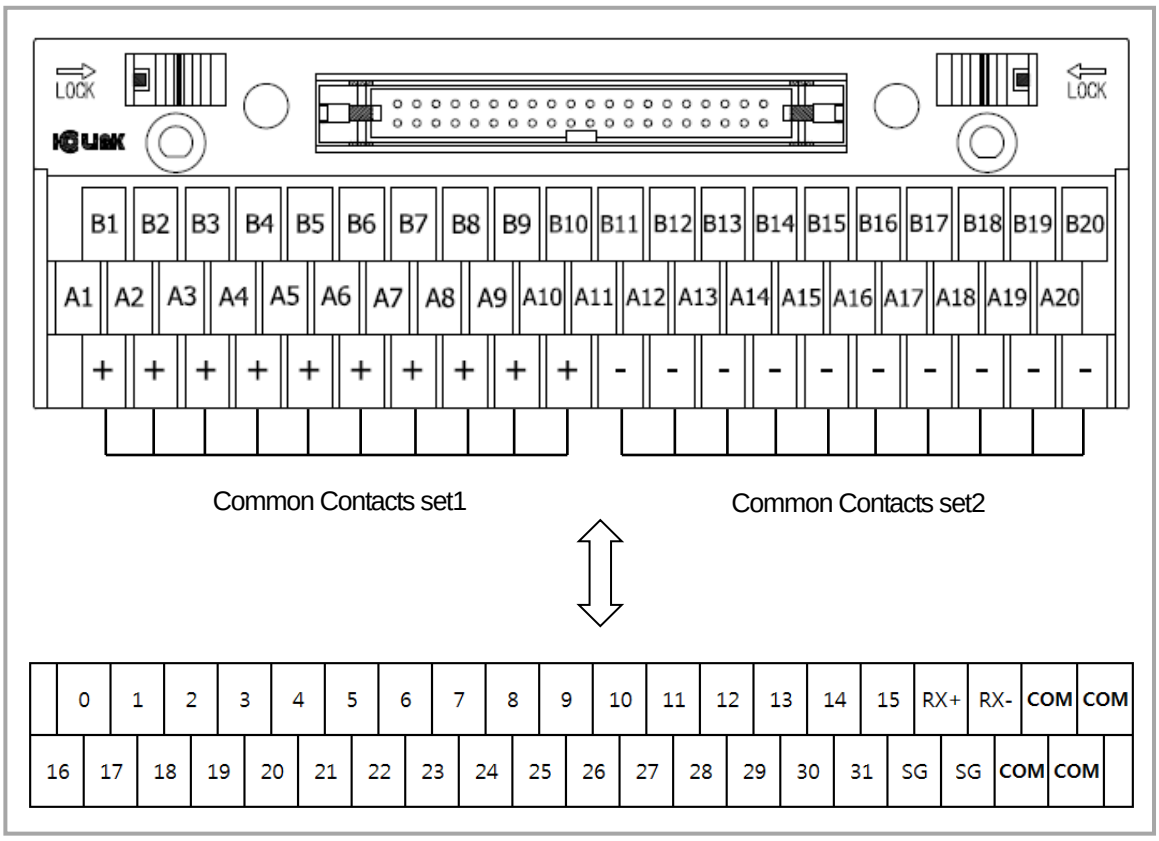
LOCK
LOCK
B1 B2 B3 B4 B5 B6 B7 B8 B9 B10 B11 B12 B13 B14 B15 B16 B17 B18 B19 B20
A1 A2 A3 A4 A5 A6 A7 A8 A9 A10 A11 A12 A13 A14 A15 A16 A17 A18 A19 A20
+ + + + + + + + + + - - - - - - - - - -
Common Contacts set1
Common Contacts set2
0 1 2 3 4 5 6 7 8 9 10 11 12 13 14 15 RX+ RX- COM COM
16 17 18 19 20 21 22 23 24 25 26 27 28 29 30 31 SG SG COM COM

9.6.6 Smart Link Specifications & Dimensions

(1) TG7-1H40S

1) Specifications

Rated Voltage	AC, DC 125V
Rated Current	1A
Withstanding Voltage	600V 1min
Insulation resistance	100MΩ (DC 500V)
Applicable Wire	1.25 ㎟ /MAX
T/B Screw	M3 X 10L
Screw Torque	1.2N • m(12Kgf • cm)
Case	Modified PPO(Noryl)(UL 94V-0)

2) Dimensions(mm)

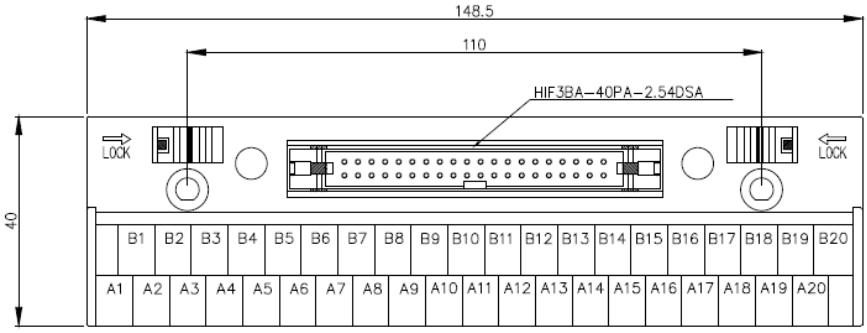

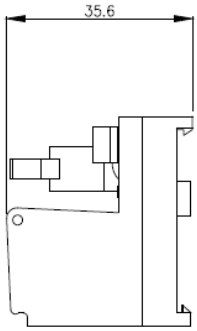

(2) TG7-1H40CA

1) Specifications

Rated Voltage		125V AC / 24V DC
Rated Current	IO	1A
	Common	10A (Total)
Insulation resistance		100MΩ (DC 500V)
Withstanding Voltage		AC500V 1min
Applicable Wire		AWG22-16 (MAX / 1.5 ㎟)
Contact Screw		M3 X 10L
Screw Torque		1.2N • m(12Kgf • cm)
Ambient Temperature		-10℃ ~ +50℃ (Non-condensing)
Terminal Block & Cover		Modified PPO
Protective Cover		Polycarbonate
PCB		Epoxy 1.6t

2) Dimensions(mm)

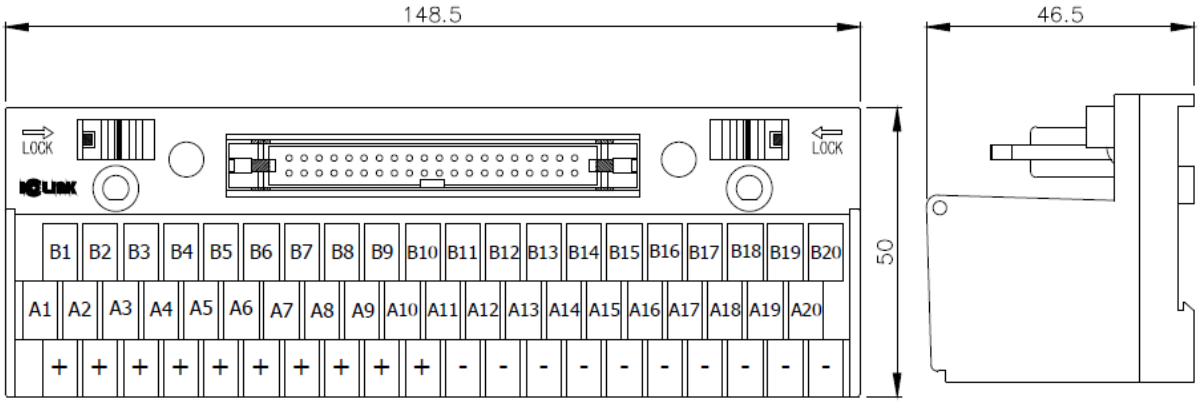

(3) R32C-N(P)S5A-40P

1) Specifications

(a) Relay Board

Case	Modified PPO
Protective Cover	Polycarbonate
PCB	Epoxy 1.6t / 2oz
Applicable Wire	AWG22-16 (MAX / 1.5 ㎟)
T/B Screw	M3 X 8L
Screw Torque	1.2N • m(12Kgf • cm)
Ambient Temperature	-10℃ ~ +50℃ (Non-condensing)

(b) Relay

Specification		PA1a-24V
Contact	Arrangement	1a
	Nominal switching capacity	5A 250V AC / 5A 30V DC
	Max. switching current	5A
	Max. switching voltage	250V AC / 110V DC
Coil	Rated Voltage	24V DC
	Pick-up voltage	16.8V
	Drop-out voltage	1.2V DC
	Coil resistance	3,200Ω
	Rated operation power	180mW
Surge voltage between contact and coil		4,000V
Initial breakdown voltage Between contact and coil		2,000V rms

2) Dimensions(mm)

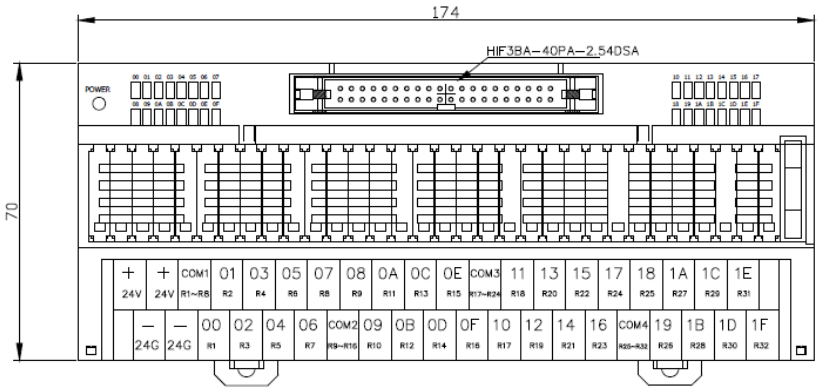

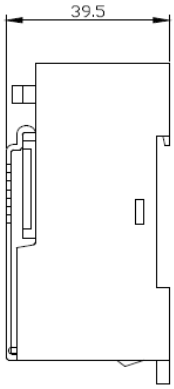

Chapter 10 Base and Expansion Cable

10.1 Specification

10.1.1 Basic base

Power module, CPU module, Ethernet communication module can be inserted into basic base.

XGR-M02P/XGR-M06P uses 5.5A output power module.

Table 1 Specification of basic base

Name / Item	XGR-M02P	XGR-M06P
The no. of IO module	2 modules	6 modules
Dimension (mm)	238 X 98 X 19	346 X 98 X 19
Distance of hole for panel attachment	218 X 75	326 X 75
Specification of hole for panel attachment	ϕ 4.5 (M4 screw used)	
Specification of screw for PE connection	(+)PHM 3 X 6 washer(ϕ 5)	
Weight (kg)	0.33	0.5

10.1.2 Expansion Base

Power module, expansion driver module, IO module, special module, communication module can be inserted into expansion base.

Table 2 Specification of expansion base

Name / Item	XGR-E12P	XGR-E08P	XGR-E12H
The no. of IO module	12 modules	8 modules	12 modules
Dimension (mm)	481 X 98 X 19	373 X 98 X 19	508 X 98 X 19
Distance of hole for panel attachment	461 X 75	353 X 75	488 X 75
Specification of hole for panel attachment	ϕ 4.5 (M4 screw used)		
Specification of screw for PE connection	(+)PHM 3 X 6 washer (ϕ 5)		
Weight (kg) (kg)	0.7	0.51	0.71

10.1.3 Sync. Cable

This cable is used for the data synchronization between CPU modules.

Table 3 Specification of Sync. cable

Name / Item	XGC-F201	XGC-F501
Length (m)	2.0	5.0
Weight (g)	21g	47g
Connector	LC type	
Optical fiber diameter	62.5/125um(62.5um fiber optic core and 125um outer cladding)	
Wave length	1300nm	
Attenuation	1.3Db/1000m or less	
The quality of the material	Multi Mode Fiber (max. 2 Km) – separate order for other specifications	

10.1.4 Expansion Cable

This is the cable for connecting the basic and expansion bases. These are Ethernet cables. Electrical and optical cables are provided for use in accordance with the network type.

Especially, since the electrical cables transmit control data by tens of micro, external noise may affect system performance and control seriously.

Therefore, when using electrical cables in the XGR system, the FTP cable is the standard. If the system is subject to serious noise environment, use shielded twisted pair cable, such as STP/FSTP.

⚠ Caution

1) The length of the optical cables should not exceed 2Km.
2) The length of the electrical cables should not exceed 100m.

10.1.5 Connector for expansion cable (electrical)

The electrical expansion cables should be shielded twisted pair cables, such as FTP, STP, and SFTP, in order to meet the EMC specification and reduce external noise. To use such shield cables, the plugs and fix housing should be as follows.

(1) Connector Plug

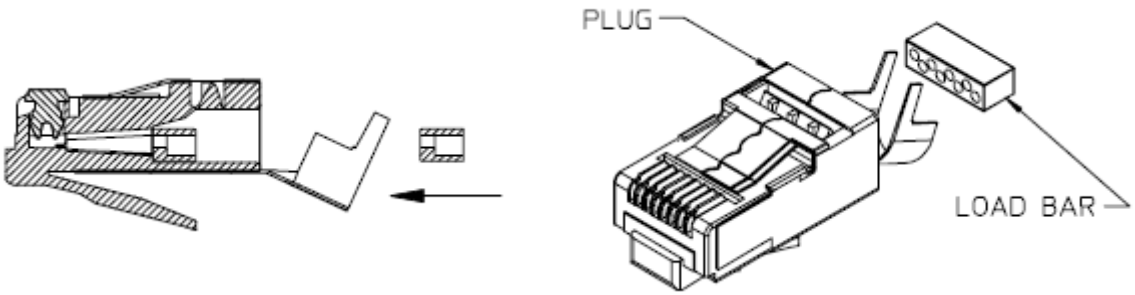

Type: RJ45 PLUG /INDUSTRIAL CAT6(44915-0021)

(2) Plug Housing

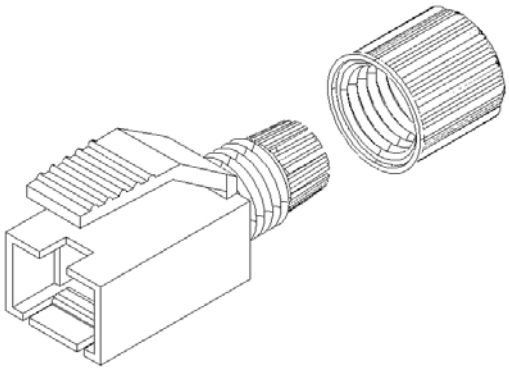

Type (for FTP): RJ45 PLUG protection cover (WRJ45-0702)

Type (for STP/SFTP): RJ45 PLUG protection cover (WRJ45-0701)

10.2 Parts and Names

10.2.1 Basic Base

Table 4. Identification and Function of the Basic Base

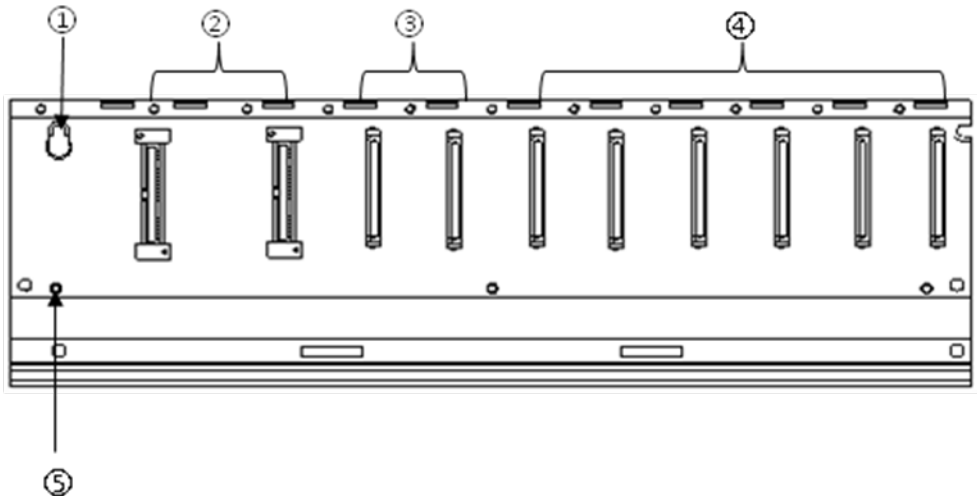

No.	Name	Function
①	Guide hole for base mounting	Hole for the installation of this base on the panel in the control cabinet
②	Power module connector	The connector for mounting power module
③	CPU module connector	The connector for mounting CPU module
④	Module mounting connector	The connector for mounting I/O module
⑤	PE terminal	Functional ground terminal

10.2.2 Expansion Base

Table 5. Identification and Function of the Expansion Base

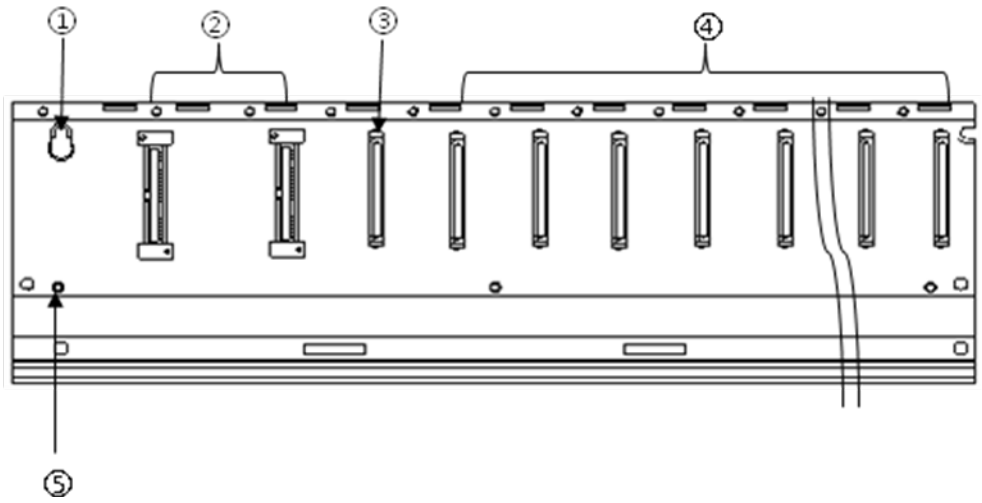

No.	Name	Function
①	Guide hole for base mounting	Hole for the installation of this base on the panel in the control cabinet
②	Power module connector	The connector for mounting power module
③	Expansion module connector	The connector for mounting expansion module
④	Module mounting connector	The connector for mounting I/O module
⑤	PE terminal	Functional ground terminal

Chapter 11. Installation and Wiring

11.1 Installation

11.1.1 Installation environment

The system keeps a high reliability, irrespective of the installation environment. However, to guarantee the reliability and stability, make sure to keep the following cautions.

(1) Environmental conditions

(a) Install in a control panel resisting to moisture and vibration.
(b) Free of any continuous impact or vibration.
(c) Not exposed to direct sunrays.
(d) No condensation from sudden temperature fluctuation.
(e) Ambient temperature range between 0 ~ 55°C.
(f) Relative humidity between 5 ~ 95%.
(g) Free of any corrosive gas or flammable gas.
(h) The falling of a thunderbolt and high voltage should not flow in

(2) Installation construction

(a) When boring a screw hole or executing wiring construction, any wiring impurities should not be inserted to the PLC.
(b) The system should be installed in a place easily accessible.
(c) Do not install the system on a same panel of a high voltage device.
(d) It should be 50mm and more away from wiring duct or proximate modules.
(e) Grounding on a position where noise is lower than the specified level.

(3) Heat protective design of control panel

(a) If installing the PLC in an air-tight control panel, it needs heat-protective(control) design considering the heat from the PLC as well as other devices. If ventilating by vent or fan, inflow of dust or gas may affect the performance of the PLC system.
(b) Install a filter or use a closed heat exchanger.

The following shows the calculation of PLC system's power consumption requiring heat protective design.

(4) Power Consumption block diagram of the PLC system

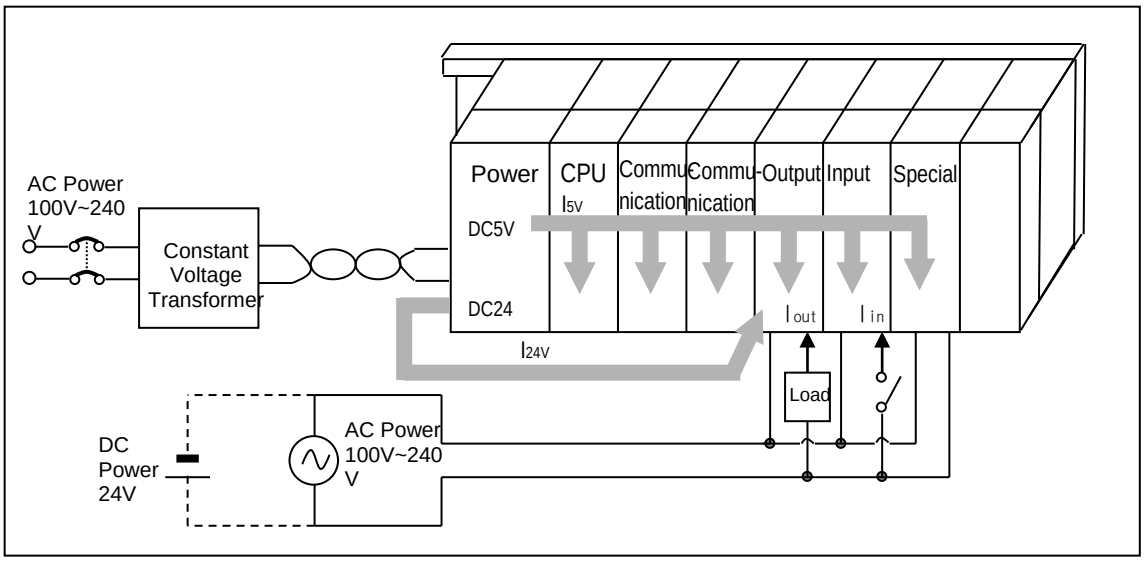

(5) Power consumption of each part

(a) Power consumption of power module

The power conversion efficiency of power module is about 70% and the other 30% is gone with heat; 3/7 of the output power is the pure power consumption. Therefore, the calculation is as follows.

- W_{pw} = 3/7 {(I_{5V} X 5) + (I_{24V} X 24)} (W)

I_{5V} : power consumption of each module DC5V circuit(internal current consumption)

I_{24V}: the average current consumption of DC24V used for output module (current consumption of simultaneous On point)

If DC24V is externally supplied or a power module without DC24V is used, it is not applicable.

(b) Sum of DC5V circuit current consumption

The DC5V output circuit power of the power module is the sum of power consumption used by each module.

- W_{5V} = I_{5V} X 5 (W)

(c) DC24V average power consumption(power consumption of simultaneous On point)

The DC24V output circuit's average power of the power module is the sum of power consumption used by each module.

- W_{24V} = I_{24V} X 24 (W)

(d) Average power consumption by output voltage drop of the output module (power consumption of simultaneous On point)

- W_{out} = I_{out} X V_{drop} X output point X simultaneous On rate (W)

I_{out} : output current(actually used current) (A)

V_{drop} : voltage drop of each output module (V)

(e) Input average power consumption of input module(power consumption of simultaneous On point)

- W_{in} = I_{in} X E X input point X simultaneous On rate (W)

I_{in}: input current (root mean square value in case of AC) (A)

E : input voltage (actually used voltage) (V)

(f) Power consumption of special module power assembly

- W_S = I_{5V} X 5 + I_{24V} X 24 + I_{100V} X 100 (W)

The sum of power consumption calculated by each block is the power consumption of the entire PLC

system.

- $W = W_{PW} + W_{5V} + W_{24V} + W_{out} + W_{in} + W_s$ (W)

Calculate the heats according to the entire power consumption(W) and review the temperature increase within the control panel.

The calculation of temperature rise within the control panel is displayed as follows.

T = W / UA [°C]
W : power consumption of the entire PLC system (the above calculated value)
A : surface area of control panel [m^2]
U : if equalizing the temperature of the control panel by using a fan and others - - - 6
If the air inside the panel is not ventilated - - - - - - - - - - 4

Note

(1) If the control cabinet is not well ventilated, temperature gradient in the cabinet may be large. Care must be taken that the parts right above heat generating devices may become very hot.
(2) Coefficient U, which can be different according to quantity of material, is general example

Calculation example)
Redundant basic base: 4 communication modules equipped
Expansion base 1: optical expansion drive, 6 Input modules, 6 output modules
Expansion base 2:optical expansion drive, 6 analog input modules, 6 analog output modules.

Structure figure, calculation according to above steps

11.1.2 Cautions for handling

It describes the cautions for handling from unpacking to installation.

- Please do not drop it or apply excessive force on it.
- Please do not separate PCB from the case. It may cause a trouble.
- During wiring, a special attention should be paid so that impurities such as wiring remainder should not be inserted into the top of a module. If impurities are found, immediately remove them.

(1) Cautions for handling I/O module

It describes the cautions for installing or handling I/O module.

(a) Recheck the I/O module specifications.
The input module may be affected by input voltage while the output module may be subject to breakage, destruction or a fire if the voltage over the max. switching capacity is allowed.

(b) Available cable type
Cable should be selected in consideration of ambient temperature and allowable current; the min. size of cable should be AWG22(0.3mm^2) and higher.

(c) Environment
If I/O module wiring is close to heating sources or materials or the wiring is directly contacted with oils for a long time during wiring, it may cause short-circuit, destruction or malfunction.

(d) Polarities
Please make sure to check the polarities of modules of which terminal block is polarized before allowing the power.

(e) Wiring

- When I/O wiring is executed with high voltage or power cable, it may cause inductive fault, probably leading to malfunction or trouble.
- No cable should not be arranged front of I/O operation display(LED) (I/O display may be hidden, hindering the interpretation)
- If an output module is connected to inductive load, please make sure to connect a surge killer or diode to load in parallel. Please connect the cathode side of a diode to (+) o f the power.

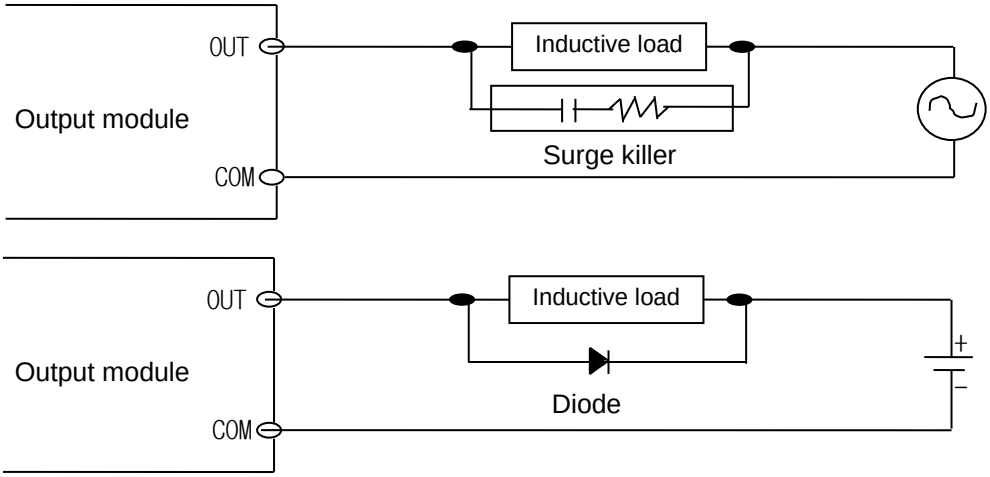

(f) Terminal strip

Please check the tightness of terminal strip and prevent any wiring impurities(remainder) from being inserted into the PLC when processing terminal strip wiring or screw hole making. It may cause malfunction or trouble.

(g) Besides the above, it is prohibited to apply excessive impact on I/O module or separating PCB board from the case.

(2) Cautions for installing the base

It describes the cautions when installing the PLC on the control panel and others.

(a) A proper distance between the top of a module and structure/parts should be secured to facilitate ventilation and module replacement.

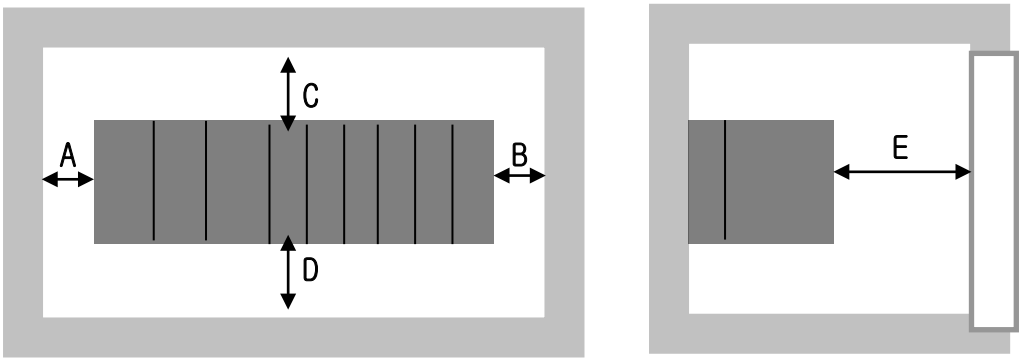

A, B : more than 5 cm

C, D : more than 5 cm for easy attachment/detachment
(more than 3cm with wiring duct. In case of duct height is more than 5cm, keep the distance more than 5cm.)
In case using optical communication or maximum load of power module, keep the distance more than 15cm for ventilation.

E: more than 10 cm
- In case of using optical cable, IO module of connector type, more than 8 cm distance necessary
- In case of Ethernet FTP cable, more than 10cm distance necessary

(b) Please do not install it vertically or horizontally for the ventilation purpose.

(c) Please use a different panel or secure a proper distance if there is vibration source from a large electronic contact or
no-fuse breaker

(d) If necessary, please install a wiring duct. However, please keep the following cautions.

- If installing on the top of PLC, maintain the height of a wiring duct 50mm more than for better ventilation. In addition, maintain the distance from the top of PLC so that the hook on the top of the base can be pressed.
- If installing on the bottom of it, let optical or coaxial cable be connected and consider the minimum radius of the cable.

(e) Please install the PLC along the well-ventilated direction as presented below for the heat prevention purpose.

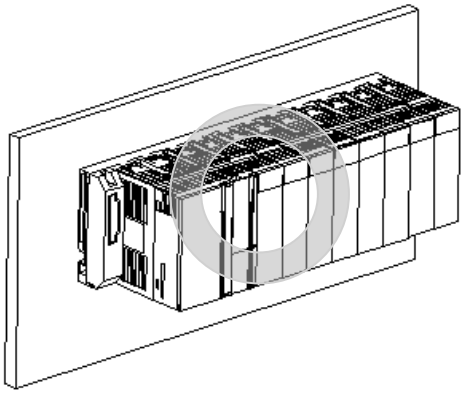

(f) Please do not install it to the direction as presented below.

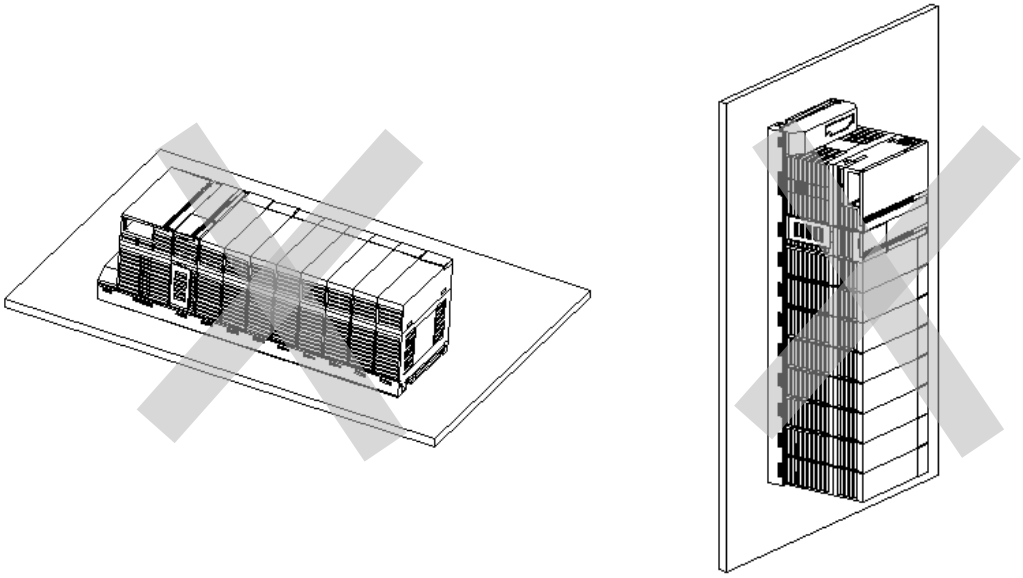

(g) To avoid any influence of radiating noise or heat, please install the PLC and other devices(relay, electronic contact) with a spacing secured as presented below.

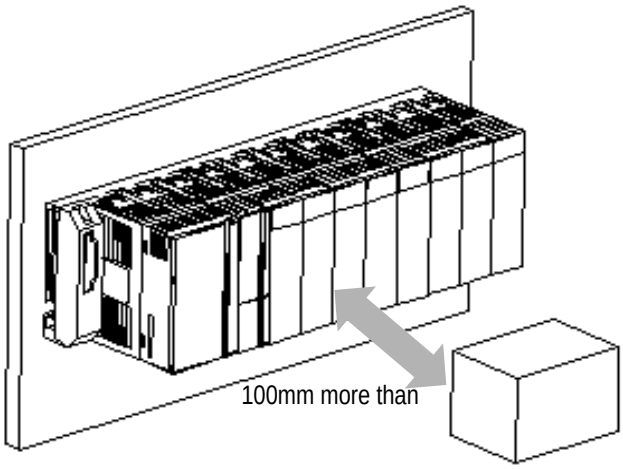

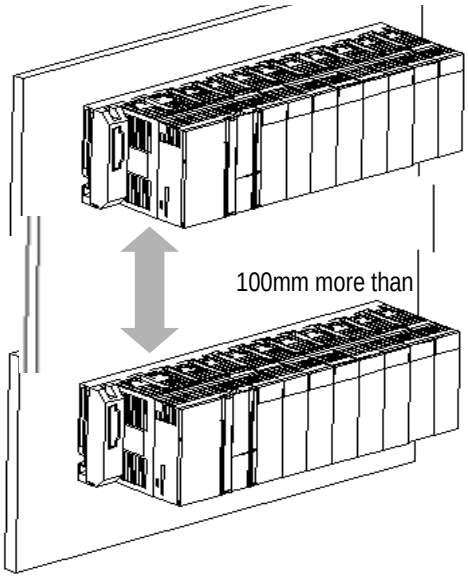

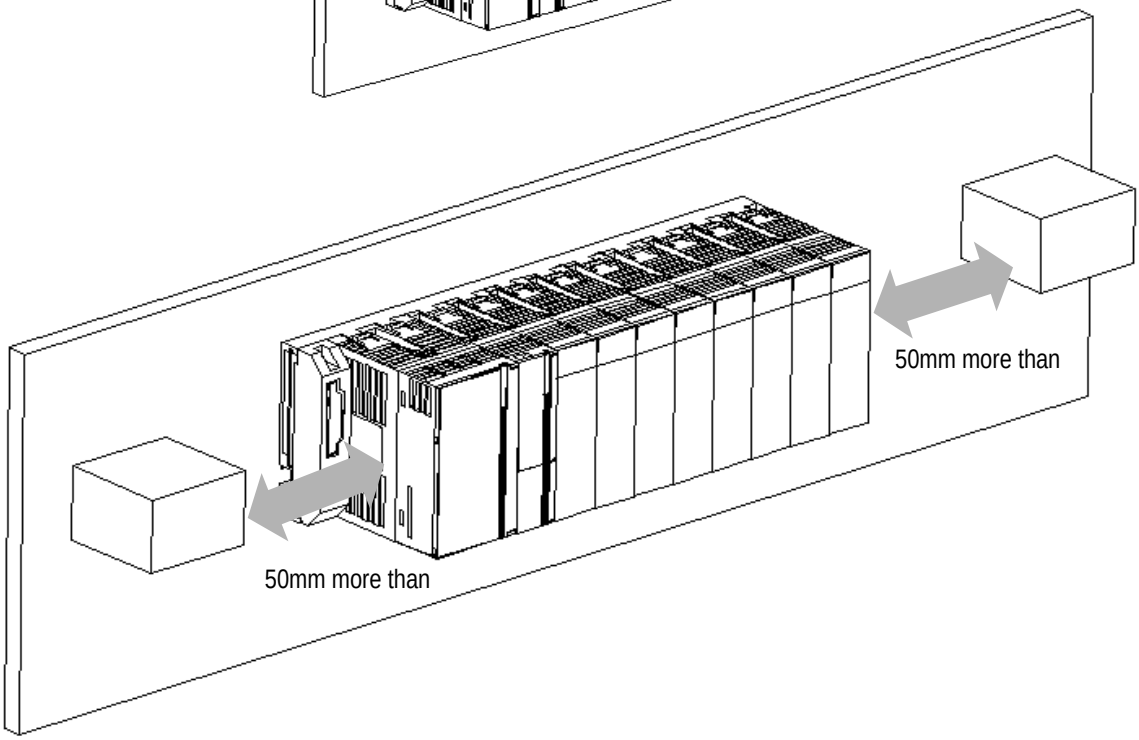

(h) In a layered-installation of PLCs, the temperature of the base at the top may become very high due to the heat transferred from the lower layers. If the temperature in the control cabinet is high, install a ventilating fan, or provide sufficient distances between the bases.

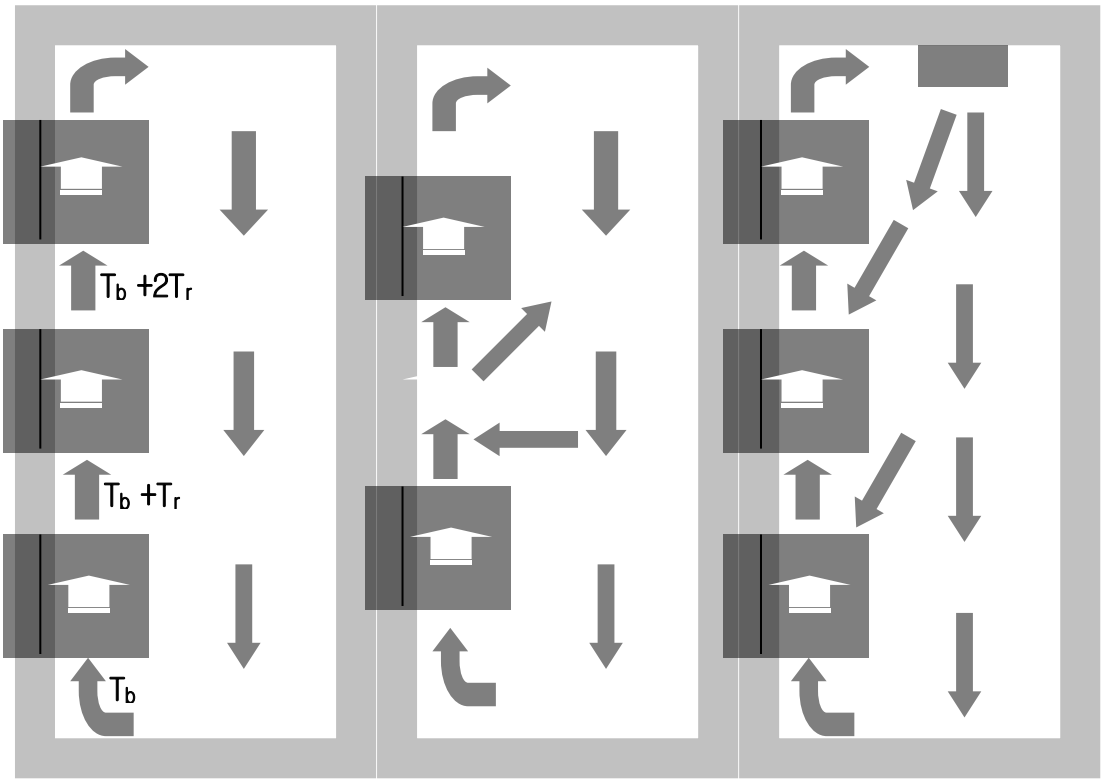

[Closed installation] [Installation with distance] [Ventilating fan]

⚠ Caution

(1) In case of closed installation, the temperature(**T_b +T_r**) around the modules right above the optical communication module and power module which generate large heat may be higher than that at other positions by 15℃.

(The temperature of the air near the modules should not exceed 55℃.)

- Optical communication module: XGR-CPU(optical) module, expansion drive (optical) module, inter-PLC communication (optical) module

(2) In order to dissipate the heat radiated from PLCs, heat conductivity between the enclosure wall and bases or base chassis should be considered in the design and installation.

11.1.3 Attachment/Detachment of modules

It describes how to attach or detach a module on the base.

(1) Attachment

- Please insert the fixation projection on the bottom of a module to the hole of module installation of the base.
- Please fix it on the base by pushing the top of a module and tight it by using the module fixation screw.
- Please try to pull the top of a module to check whether it is tightly fixed on it.

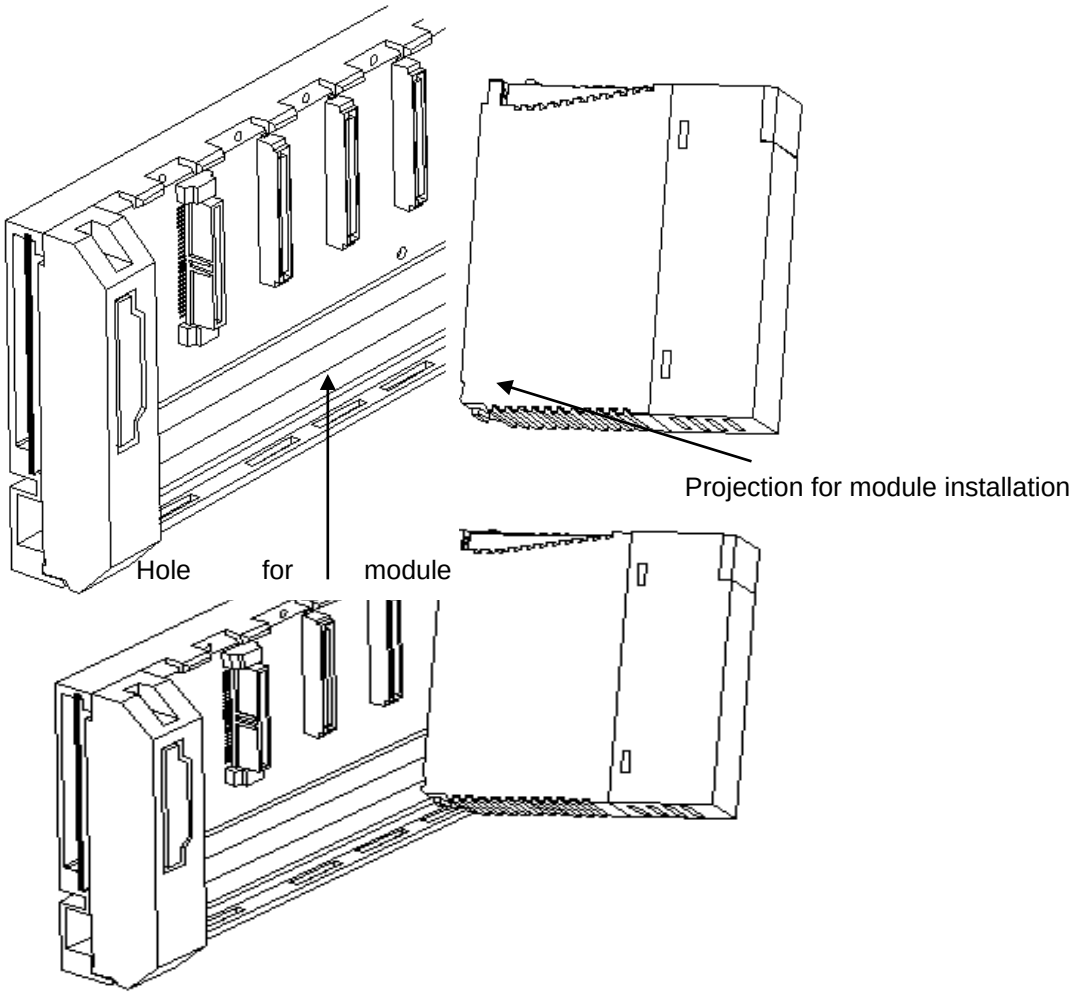

Caution

(1) A module should be installed by inserting the projection for module installation to the hole for module installation. If applying an excessive force, a module may be broken.

(2) Detachment

- Please unscrew the fixation screw on the top of a module.
- Please press the hook for module installation with a module held by both hands.
- Please pull the bottom of a module toward the top while pressing the hook.
- Lifting up the module, please detach the projection for module installation from the hole for module installation.

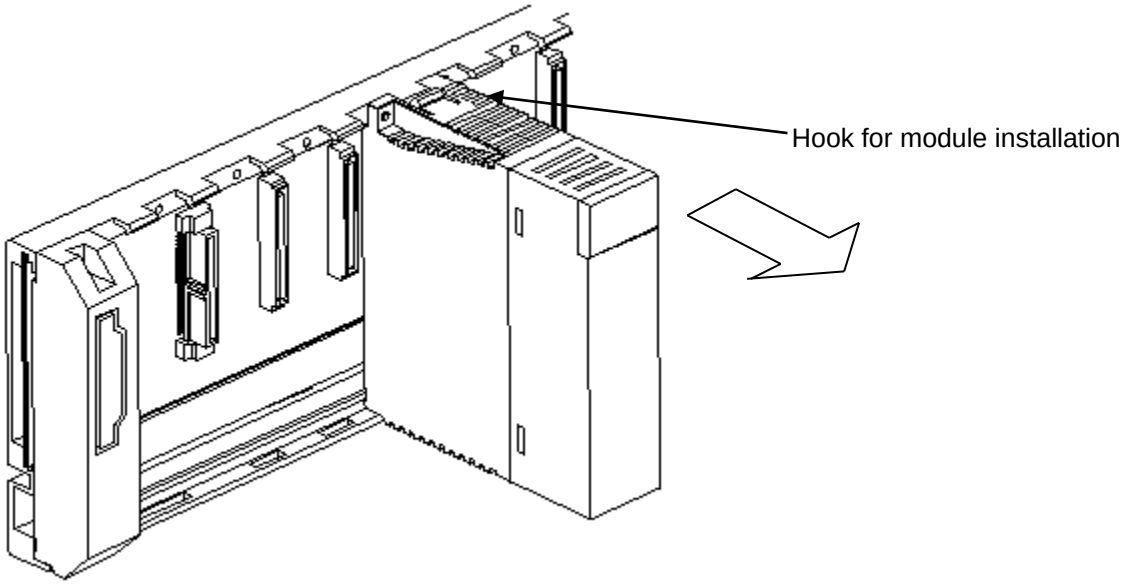

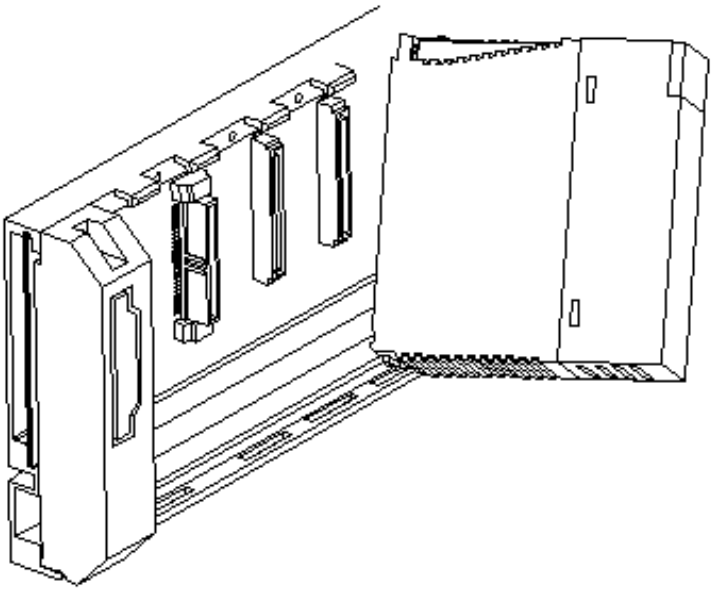

Caution

(1) When detaching a module, please press the hook to detach it from the base and then, isolate the projection for module installation from the hole for module installation. At the moment, if trying to detach it forcibly, the hook or projection may be damaged.

11.2 Wiring

It describes the important information about wiring when using the system.

11.2.1 Power wiring

(1) Connect a constant voltage transformer when the power variance is larger than the specified range.

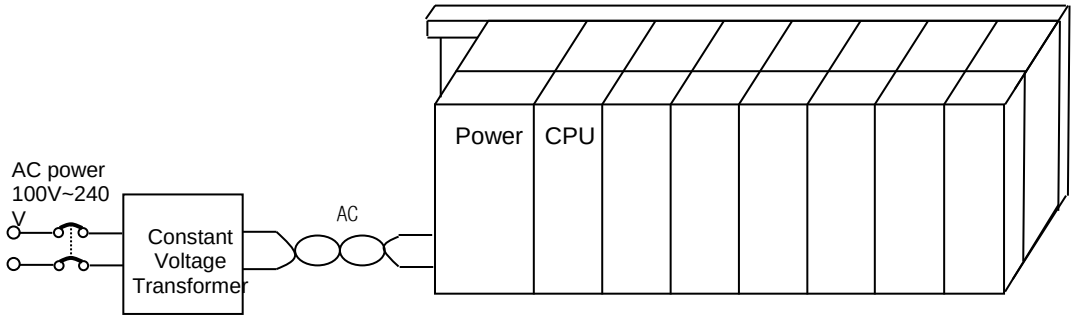

(2) Connect the power source of which inter-cable or cable-ground noise is small.
(If a large one is connected, make sure to connect to an insulation transformer)

(3) Isolate the PLC power, I/O devices and power devices as follows.

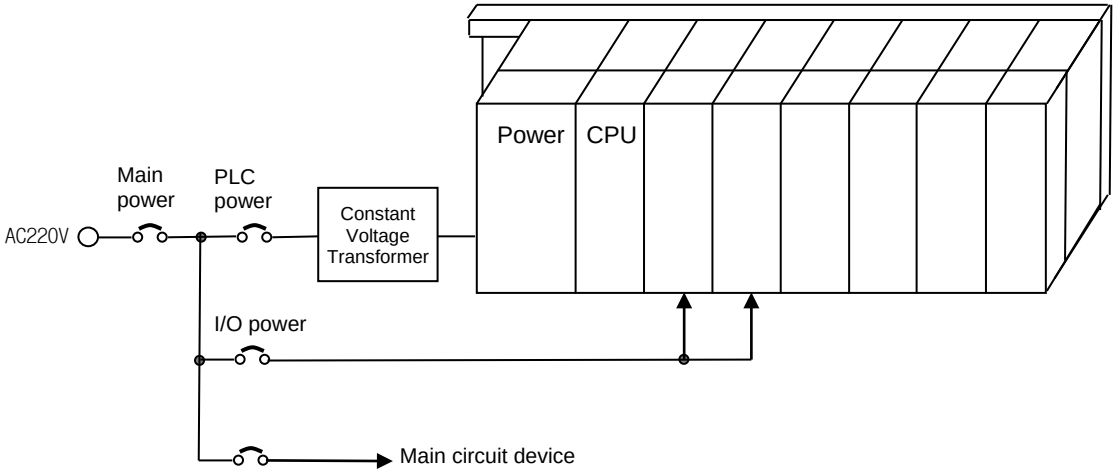

(4) If using DC24V of the power module

- Do not connect DC24V of several power modules in parallel. It may cause the destruction of a module.
- If a power module can not meet the DC24V output capacity, supply DC24V externally as presented below.

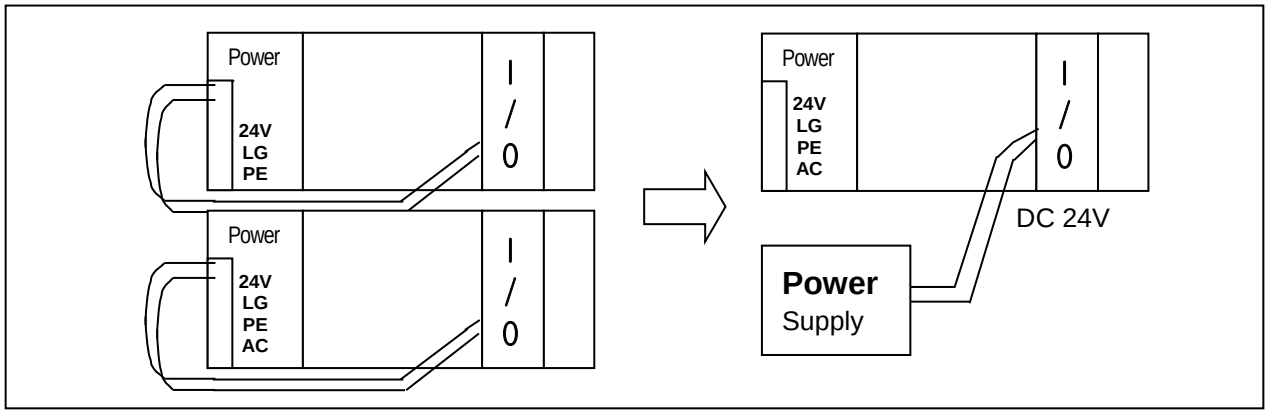

(5) AC110V/AC220V/DC24V cables should be compactly twisted and connected in the shortest distance.

(6) AC110V/AC220V cable should be as thick as possible(2mm^2) to reduce voltage drop.

AC110V/ DC24V cables should not be installed close to main circuit cable(high voltage/high current) and I/O signal cable. They should be 100mm away from such cables.

(7) To prevent surge from lightning, use the lightning surge absorber as presented below.

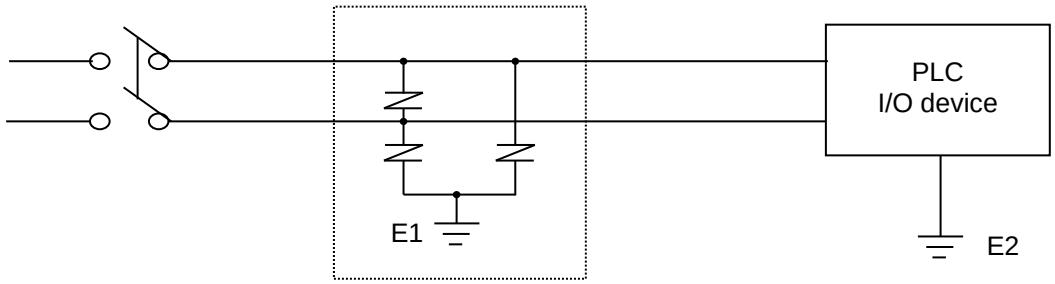

Surge absorber to prevent lighting

Caution

(1) Isolate the grounding(E1) of lightning surge absorber from the grounding(E2) of the PLC.
(2) Select a lightning surge absorber type so that the max. voltage may not the specified allowable voltage of the absorber.

(8) When noise may be intruded inside it, use an insulated shielding transformer or noise filter.

(9) Wiring of each input power should be twisted as short as possible and the wiring of shielding transformer or noise filter should not be arranged via a duct.

11.2.2 I/O Device wiring

(1) The size of I/O device cable is limited to 0.3~2 mm^2 but it is recommended to select a size(0.3 mm^2) to use conveniently.

(2) Please isolate input signal line from output signal line.

(3) I/O signal lines should be wired 100mm and more away from high voltage/high current main circuit cable.

(4) Batch shield cable should be used and the PLC side should be grounded unless the main circuit cable and power cable can not be isolated.

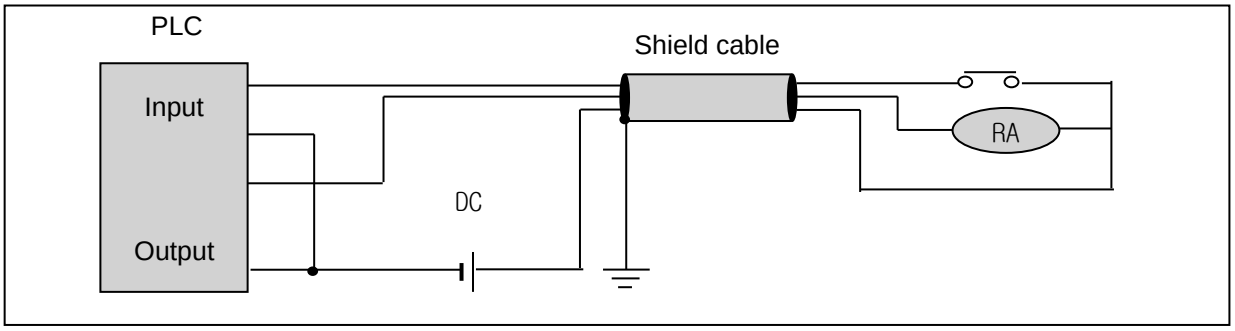

(5) When applying pipe-wiring, make sure to firmly ground the piping.

(6) The output line of DC24V should be isolated from AC110V cable or AC220V cable.

(7) For a long distance wiring over 200m, please refer to 12.4 Cases in Chapter 12 because it is expected that accident may occur due to leakage current due to inter-cable capacity.

11.2.3 Grounding wiring

(1) The PLC contains a proper noise measure, so it can be used without any separate grounding if there is a large noise. However, if grounding is required, please refer to the followings.

(2) For grounding, please make sure to use the exclusive grounding.
For grounding construction, apply type 3 grounding(grounding resistance lower than 100 Ω)

(3) If the exclusive grounding is not possible, use the common grounding as presented in B) of the figure below.

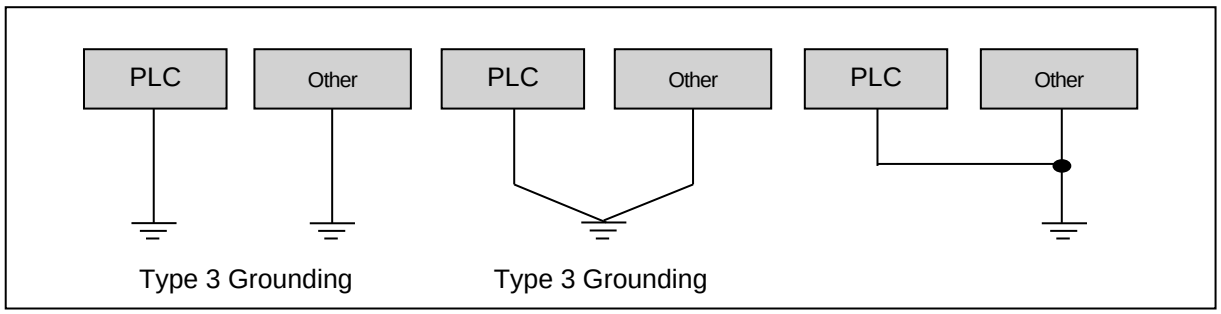

A) Exclusive grounding : best B) common grounding : good C) common grounding: defective

(4) Use the grounding cable more than 2 mm^2. To shorten the length of the grounding cable, place the grounding point as close to the PLC as possible.

(5) Separately ground the LG of the power module and the FG of the base board.

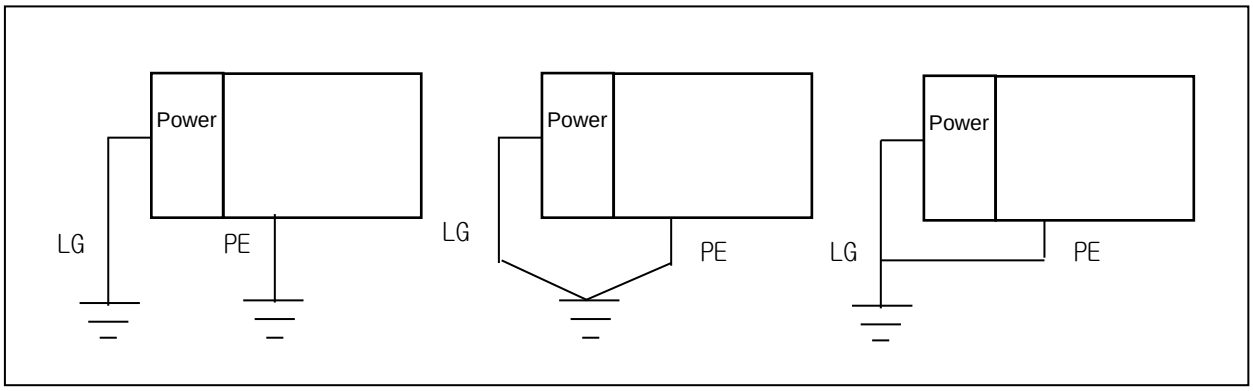

A) Exclusive grounding : best B) common grounding : good C) common grounding: defective

(6) If any malfunction from grounding is detected, separate the PE of the base from the grounding.

11.2.4 Specifications of wiring cable

The specifications of cable used for wiring are as follows.

Types of external connection	Cable specification (mm^2)	
	Lower limit	Upper limit
Digital input	0.18 (AWG24)	1.5 (AWG16)
Digital output	0.18 (AWG24)	2.0 (AWG14)
Analogue I/O	0.18 (AWG24)	1.5 (AWG16)
Communication	0.18 (AWG24)	1.5 (AWG16)
Main power	1.5 (AWG16)	2.5 (AWG12)
Protective grounding	1.5 (AWG16)	2.5 (AWG12)

Chapter 12 Maintenance

To maintain PLC in the best condition, please execute the following routine and periodic inspections.

12.1 Repairs and Maintenance

The I/O module mainly consists of semiconductor elements, so its life is almost semi permanent. However, such elements may be affected by the environment, so they should be periodically inspected and maintained. Please refer to the following checklist for the items to be checked once or twice every 6 months.

Checklist		Judgment basis	Actions
Power supply		Within the power variance range (less than –15% / +10%)	Adjust the power within the allowable voltage variance range.
I/O power		I/O specifications of each module	Adjust the power within the allowable voltage variance range.
Environment	Temperature	0 ~ + 55°C	Adjust the temperature and humidity conditions properly.
	Humidity	5 ~ 95%RH	
	Vibration	None	Use vibration-preventive rubber or other measures.
Shakes of modules		Should not have shake	Every module should be protected from shaking.
Loose terminal screw		No looseness	Tighten any loose screw.
Spare parts		Check whether the amount and conditions of spare parts are proper	Replenish insufficient parts and improve the storage condition.

12.2 Routine Inspection

The following items should be routinely inspected.

Checklist		Check point	Judgment basis	Actions
Attachment of the base		Check any loose screw	Screws should be firmly tightened.	Tightening
Attachment of I/O module		• Check the screws are firmly tightened • Check any separation of module cover	Should be firmly tightened.	Check screw
Attachment of terminal strip and expansion cable		Loosen screw	No looseness	Tightening
		Proximity with clamped terminal	Proper spacing	Calibration
		Connector of expansion cable	Connector should be tightened	Calibration
Display LED	Power LED	Check whether it is LED ON	LED On (off is error)	Please refer to chapter 14.2
	RUN LED	Check whether it is LED ON in RUN state	LED On (off or blinking is error)	
	STOP LED	Check whether it is LED Off in RUN state	Blinking is error	
	Input LED	Check whether LED On or Off	LED On with input ON and LED Off with input off	
	Output LED	Check whether LED On or Off	LED On with output ON and LED Off with output off	

12.3 Periodic Inspection

Please take a measure by checking the following items once or twice every 6 months.

Checklist		Check method	Judgment basis	Actions
Environment	Temperature	Measure by thermometer/hygrometer Measure corrosive gas	0 ~ 55 ℃	Adjusting according to the general spec.(the environment in panel)
	Humidity		5 ~ 95%RH	
	Contamination level		Free of corrosive gas	
PLC status	Looseness/shake	Try to move each module	Should be firmly attached	Tightening
	Built-in dust/impurities	Visual inspection	No built-in dust/impurities	-
Connection status	Looseness	Tightening with a screwdriver	No loosened screws	Tightening
	Proximate of clamped terminal	Visual inspection	Proper spacing	Calibration
	Loosened connector	Visual inspection	No looseness	Tightening connector screws
Check power voltage		Check the voltage of input terminal by using a tester	AC100~240V:AC85~ 264V DC24V:DC19.2 ~ 28.8V	Change the power supplied
Battery		Check the battery replacement timing and voltage drop	• Check the total interruption time and warranty period • No battery voltage drop display	A battery should be replaced if it passes the warranty period despite of no display
Fuse		Visual inspection	• No fusing	Regularly replace it because element may be deteriorated by inrush current.

Chapter. 13 EMC Compliance

13.1 Requirements Complying with EMC Specifications

EMC Directions describe “Do not emit strong electromagnetic wave to the outside: Emission” and “Do not have an influence of electromagnetic wave from the outside: Immunity”, and the applicable products are requested to meet the directions. The chapter summarizes how to structure a system using XGT PLC to comply with the EMC directions. The description is the data summarized for the requirements and specifications of EMC regulation acquired by the company but it does not mean that every system manufactured according to the description meets the following specifications. The method and determination to comply with the EMC directions should be finally determined by the system manufacturer self.

13.1.1 EMC specifications

The EMC specifications affecting the PLC are as follows.

Table 13-1

Specification	Test items	Test details	Standard value
EN50081-2	EN55011 Radiated noise ＊2	Measure the wave emitted from a product.	30~230 ㎒ QP : 50 dBμV/m ＊1 230~1000 ㎒ QP : 57 dBμV/m
	EN55011 conducted noise	Measure the noise that a product emits to the power line.	150~500 ㎑ QP : 79 dB Mean : 66 dB 500~230 ㎒ QP : 73 dB Mean : 60 dB
EN61131-2	EN61000-4- 2 Electrostatic immunity	Immunity test allowing static electricity to the case of a device.	4 ㎸ Contact discharge
	EN61000-4-4 Fast transient burst noise	Immunity test allowing a fast noise to power cable and signal cable.	Power line : 2 ㎸ Digital I/O : 1 ㎸ Analogue I/O, signal lines : 1 ㎸
	EN61000-4-3 Radiated field AM modulation	Immunity test injecting electric field to a product.	10Vm, 26~1000 ㎒ 80% AM modulation@ 1 ㎑
	EN61000-4-12 Damped oscillatory wave immunity	Immunity test allowing attenuation vibration wave to power cable.	Power line : 1 ㎸ Digital I/O(24V and higher) : 1 ㎸

＊1 : QP: Quasi Peak, Mean : average value

＊2 : PLC is a type of open device(installed on another device) and to be installed in a panel.
For any applicable tests, the system is tested with the system installed in a panel.

13.1.2 Panel

The PLC is a kind of open device(installed on another device) and it should be installed in a panel. It is because the installation may prevent a person from suffering from an accident due to electric shock as the person contacts with the product(XGT PLC) and the panel can attenuates the noise generating from the PLC.

In case of XGT PLC, to restrict EMI emitted from a product, it should be installed in a metallic panel. The specifications of the metallic panel are as follows.

(1) Panel

The panel for PLC should be installed and manufactured as follows.

(a) The panel should be made of SPCC(Cold Rolled Mild Steel)
(b) The plate should be 1.6mm and thicker
(c) The power supplied to the panel should be protected against surge by using insulated transformer.
(d) The panel should be structured so that electric wave is not leaked outside. For instance, make the door as a box as presented below. The main frame should be also designed to be covered the door in order to restrict any radiating noise generated from the PLC.

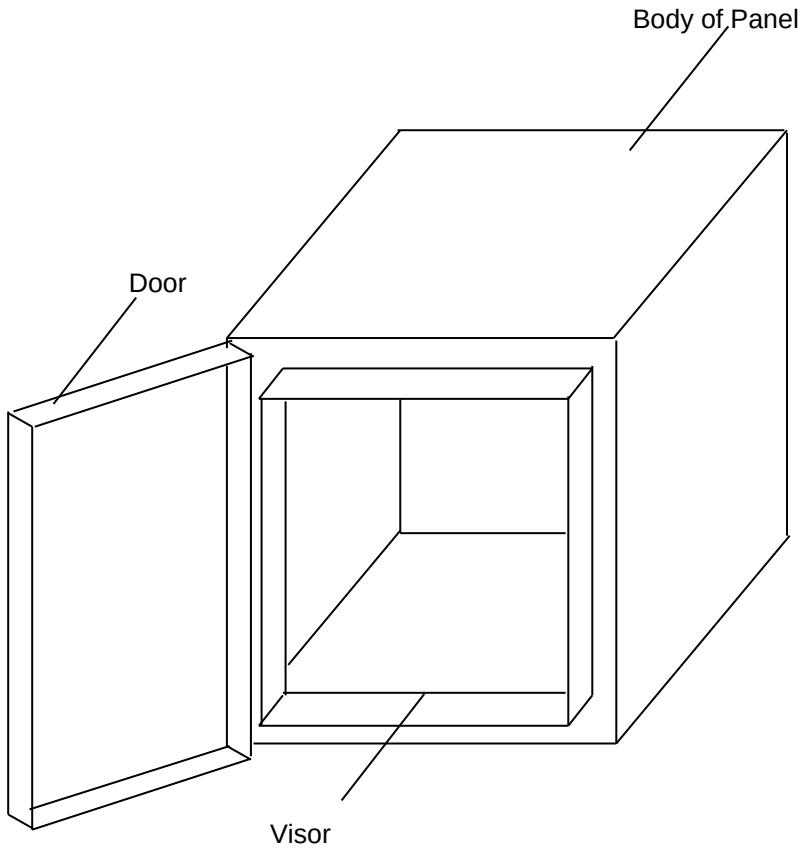

(e) The inside plate of panel should have proper conductivity with a wide surface as possible by eliminating the plating of the bolt used to be mounted on the main frame in order to secure the electric contact with the frame.

(2) Power cable and grounding cable

The grounding/power cable of PLC should be treated as follows.

(a) The panel should be grounded with a thick wire() to secure a lower impedance even in high frequency.
(b) LG(Line Ground) terminal and PE(Protective Earth) terminal functionally let the noise inside the PLC flow into the ground, so a wire of which impedance is low should be used.
(c) Since the grounding cable itself may generate noise, thick and short wiring may prevent it serving as an antenna.

13.1.3 Cable

(1) Expansion cables can be classified into optical and electrical cables according to the connector type.

(a) For the optical cables, use MMF(Multi Mode Fiber) 50/65um LC Type Cable.
Use indoor type, outdoor type, or conduit type according to the installation site.

Fig. MMF(LC Type) cable

(b) For the electrical cables, communication can be done with 100Mbit Twisted Pair cables, however, since the data transmission in expansion cables is in tens of micro unit, external noise may affect system performance and control seriously.

Therefore, electrical cables used in XGR systems should, basically, be shielded twisted pair cables such as FTP, STP, or FSTP.

FTP Cable

Fig. FTP Cable

STP Cable

Fig. STP Cable

(2) Fixing a cable in the panel

If the expansion cable of XGT series is to be installed on the metallic panel, the cable should be 1cm and more away from the panel, preventing the direct contact.

The metallic plate of panel may shield noise from electromagnetic wave while it a cable as a noise source is close to the place, it can serve as an antenna. Every fast signal cable as well as the expansion cable needs proper spacing from the panel

13.2 Requirements Complying with Low Voltage Direction

The low voltage direction requires a device that operates with AC50~1000V, DC 75 ~ 1500V to have proper safety. The followings summarize the cautions for installing and wiring PLC of the XGT series to comply with the low voltage directions. The description is the data based on the applicable requirements and specifications as far as we know but it does not mean that every system manufactured according to the description meets the following specifications. The method and determination to comply with the EMC directions should be finally determined by the system manufacturer self.

13.2.1 Specifications applicable to XGT series

XGT series follow the EN6100-1(safety of the device used in measurement/control lab).
XGT series is developed in accordance with the above specifications, even for a module operating at the rated voltage higher than AC50V/DC75V.

13.2.2 Selection of XGT series PLC

(1) Power module
The power module of which rated input voltage is AC110/220V may have dangerous voltage(higher than 42.4V peak) inside it, so any CE mark compliance product is insulated between the primary and the secondary.

(2) I/O module
The I/O module of which rated voltage is AC110/220V may have dangerous voltage(higher than 42.4V peak) inside it, so any CE mark compliance product is insulated between the primary and the secondary. The I/O module lower than DC24V is not applicable to the low voltage directions.

(3) CPU Module, Base unit
The modules use DC5V, 3.3V circuits, so they are not applicable to the low voltage directions.

(4) Special module, Communication module
The modules use the rated voltage less than DC 24V, so they are not applicable to the low voltage directions.

Chapter 14 Built-in PID Function

This chapter describes XGR Series CPU built-in PID function.

14.1 Features

The features of PID function built-in XGR-CPU are as follows.

(1) It can execute precise control operation.
(2) It has a fast operation cycle up to 0.6ms.
(3) XGR CPUH can operate totally 256 loops by using 32 loops in 8 blocks.
(4) Symbol variable function facilitates setting and monitoring.
(5) It supports forward/reverse operation process.
(6) Strong dual anti windup prevents effective over/under shoot.
(7) It may be operated by external device (HMI).
(8) It protects the system by restricting the max. variance of PV.
(9) It protects the drive by restricting the max. variance, max value and min value of MV.
(10) Auto-tuning function is used for PID control.
(11) Cascade PID control is available.

14.2 PID Control

PID Control compares the value measured at detection (process value) to the pre-determined value, adjusts outputs (control signal) to eliminate, if any, an error between two values, making the current value to the target value, in order to maintain the state of an object to control be a pre-determined value (target value).

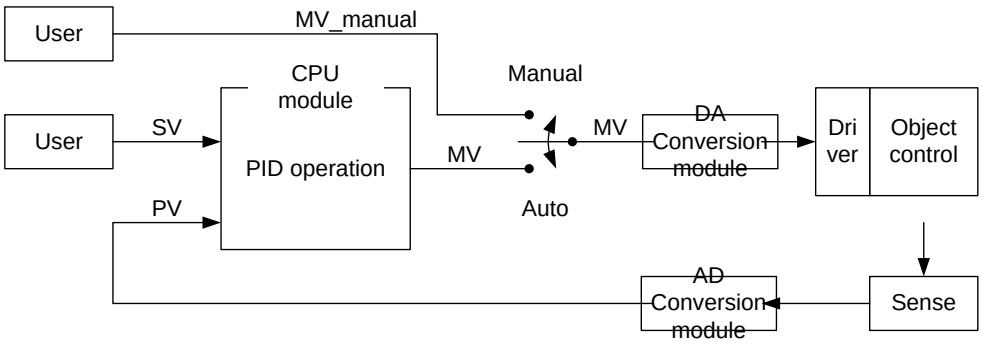

As presented in the above figure, PLC functions as a control in a whole control system while sensor and driver are used to detect an object to control and drive the system, respectively.
When a sensor detects the current state of an object to control and delivers it to a control, PLC executes an operation of output and delivers it to a driver. Meanwhile, a driver drives the object according to the output. Finally, a sensor detects the changed state and re-sends it to PLC, forming a closed loop.
A procedure circulating a control loop repeats at the unit of several seconds and hundreds of microseconds and the time is called control cycle.

14.3 PID Control Operation

14.3.1 Terms used

It describes the terms necessary to explain PID control operation.

SV	: Set value to which an object to control should reach
T_s(Ts)	: Sampling time (control cycle)
K_p(Kp)	: Proportional constant
T_i(Ti)	: Integral time constant
T_d(Td)	: Differential time constant
PV	: Current state of an object to control, which is detected by a sensor
E	: Error of an object to control, which is expressed in (SV – PV)
MV	: Control input or control's output
MV_p(MVp)	: Proportional component of MV
MV_i(MVi)	: Integral component of MV
MV_d(MVd)	: Differential component of MV

14.3.2 PID equation

PID Equation may be expressed from equation (14.3.1) through equation (14.3.5).

$$E = SV - PV \qquad (14.3.1)$$

$$MV_p = K_p E \qquad (14.3.2)$$

$$MV_i = \frac{K_p}{T_i}\int E\,dt \qquad (14.3.3)$$

$$MV_d = K_p T_d \frac{dE}{dt} \qquad (14.3.4)$$

$$MV = MV_p + MV_i + MV_d \qquad (14.3.5)$$

Error is a mathematical expression indicating how far the current system is out of a user's desirable state.
For instance, assuming that a user wishes to maintain water in an electric kettle at 50℃ and the temperature of water is 35℃, SV and PV are 50℃ and 35℃, respectively and **error E is 15, the difference between SV and PV**. The control executes PID operation according to the error.
Note that MV totally consists of each component of P, I and D, that is, MV_p, MV_i and MV_d, as presented in figure (14.3.5). namely, if subtracting D from PID control equation, it results in PI control; alike, if subtracting I and D, it results in P control.

14.3.3 P control

As seen in the equation (14.3.7), MV of P control consists of proportional operation, MV_p only. The term is applicable as a type multiplying proportional coefficient by error. A user should adjust the coefficient according to the system and as larger it is set, as more it is sensitive to error.

$$MV_p = K_p E \qquad (14.3.6)$$

$$MV = MV_p \qquad (14.3.7)$$

When applying P control to a temporary virtual system, the control tendency features as below.
The following system is made to help you understand; it may be different with the actual temperature (control) system.

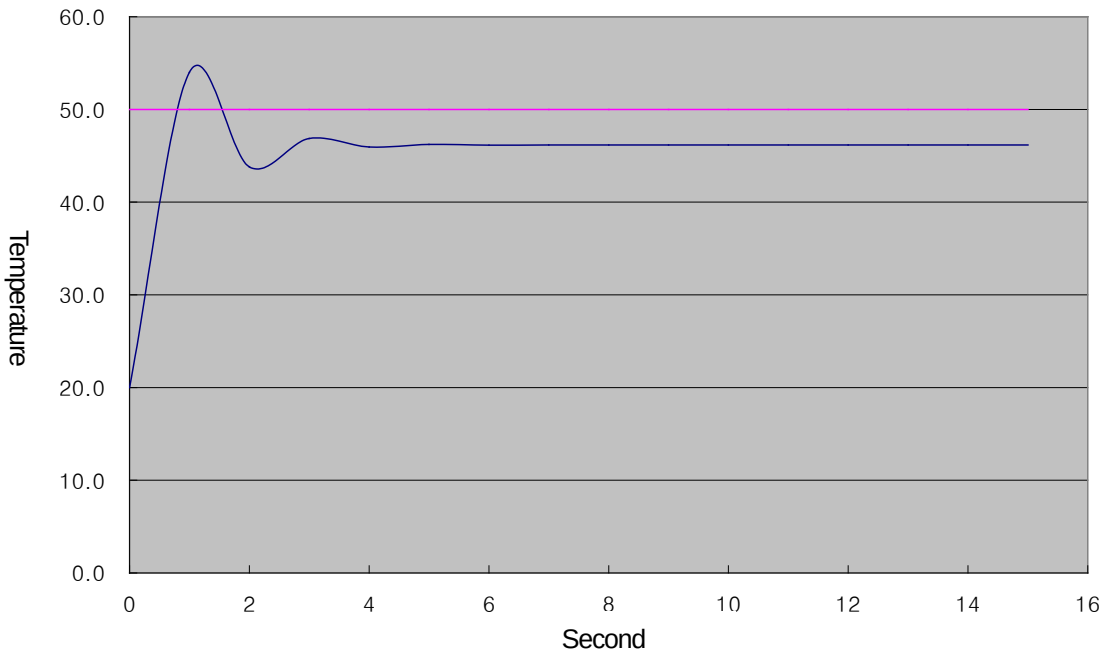

In the above simulation, SV is 50.0 and the above tendency is gained by adjusting K_p value properly. The above system shows a stable state in 4 seconds after being operated at 20℃ and it is maintained at 46.2℃, so the residual drift is 3.8℃(about 7.6%). As such, the reason why P control has a permanent residual drift is because as closer PV approaches to SV, as smaller error (E) is, reducing MV, so it maintains state balance at equilibrium point (in the example, 46.2℃). PI control is used to supplement the residual drift intrinsically existing in P control.

14.3.4 PI control

PI (proportional-integral) control is calculated by summing up proportional term and integral term as seen in the equation (14.3.10). To reduce the residual drift, a disadvantage of proportional term, PI control uses integration of the error.

$$MV_p = K_p E \qquad (14.3.8)$$

$$MV_i = \frac{K_p}{T_i}\int E\,dt \qquad (14.3.9)$$

$$MV = MV_p + MV_i \qquad (14.3.10)$$

Even though error is uniform, the integral is accumulated as time goes on if applying integral calculus until the error is eliminated. Therefore, PI control may be used to supplement the residual drift intrinsically existing in P control. Note that Ti, the integral time constant is the denominator of integral term, so it represents that integral effect is larger as smaller the value of Ti. The following graph shows the results of PI control to P control application system.

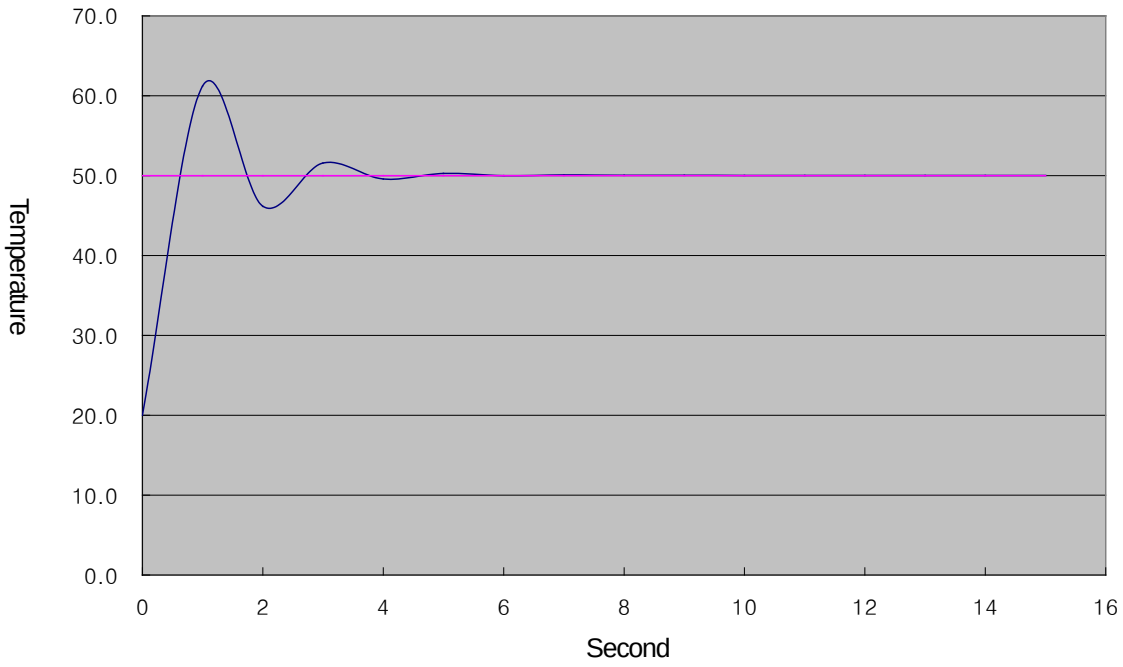

As a result of adding integral effect, the residual drift disappears and the system is converged to 50℃ accurately. However, the temperature temporarily increased more than a desirable temperature, for which it increased up to 61.2℃ and dropped, deepening overshoot. Excessive overshoot may overburden the system or make it unstably, so it is necessary to relieve the overshoot through proper coefficient tuning or improve it by means of PIC control applying differential effect.

14.3.5 PID control

PID control relieves the vibration of PI control by adding differential effect to PI control as expressed in equation (14.3.1) through (14.3.5). The effect is working when the system's state is changed after comparing to the previous state, irrespective of the error of system. However, it is necessary to install a filter on the sensor's input and set the differential coefficient small to prevent differential effect from operating against a small change as much as a system noise. In case of an actual system, it is common to use 0.001 ~ 0.1.

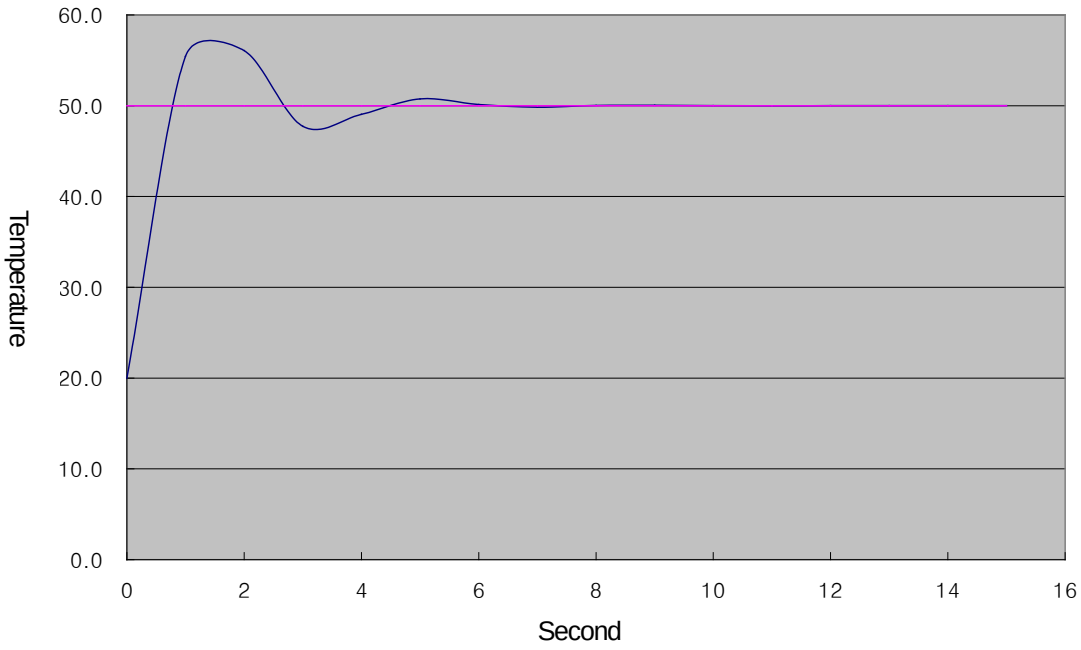

14.4 PID Instruction

14.4.1 PID loop state

PID loop has 5 states; PIDSTOP, AUTOTUNE, PIDRUN, PIDCAS and PIDPAUSE.

(1) PIDSTOP is the state in which output (MV) is MV_min, its internal state is initialized and user setting is maintained. In the state, it is not possible to access to PIDPAUSE state.

(2) AUTOTUNE is the state that is immediately executed when a user turns on _PID[B]_[L]AT_EN bit either PIDRUN or PIDCAS. If among PIDSTOP, _PID[B]_[L]AT_EN is on, it goes into AUTOTUNE state when it goes toward PIDRUN and PIDCAS. Once AUTOTUNE is complete, PIDRUN or PIDCAS state is restored. AUTOTUNE checks a system's response for a series of inputs and finds PID coefficient (K_p, T_i, T_d) and operation cycle (T_s). These values are updated as soon as Auto-tuning ends, so it loses the previous coefficients.

(3) PIDRUN is the state in which PID loop normally executes control operation. MV is outputted by PID operation and it executes every scan operation independently, so it applies every setting that is changed during the procedure. In case "contact front of PIDRUN instruction is ON", it enters PIDRUN state, or if there is PIDRUN instruction in ladder program and PIDxx_REM_RUN is ON, it may enter PIDRUN state.

(4) PIDCAS is the state in which two loops form a master loop and a slave loop respectively, executing control operation. It is possible to enter PIDCAS state by using PIDCAS instruction after setting these two loops in a way like PIDRUN, and data are exchanged between loops as the internal connection necessary for two loops are automatically created. Loops that operate by cascade are indicated in a state flag, PIDxx_STATE and in the state, remote operation PIDxx_REM_RUM bit does not work.

(5) PIDPAUSE is the state in which output, internal state and user setting are maintained and the control operation stops. To enter PIDPAUSE state, it is necessary to turn on PIDxx_PAUSE bit or use PIDPAUSE instruction. However, it is possible to enter PIDPAUSE as long as the previous state is PIDRUN.

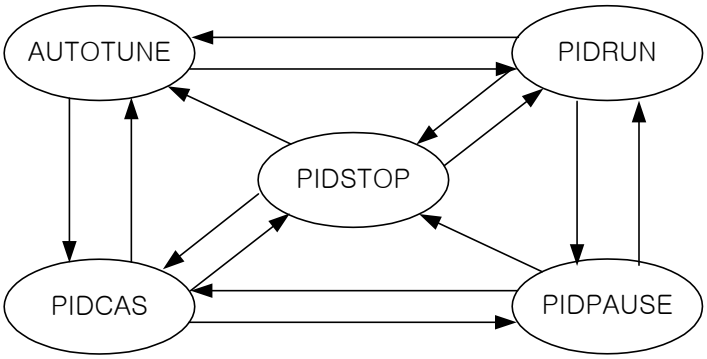

14.4.2 PID instruction group

PID instruction group includes four instructions; PIDRUN, PIDCAS, PIDINIT and PIDPRMT.
Actually, every operation of PID function is wholly taken by PIDRUN or PIDCAS instruction. PIDINIT and/or IDPPMT instructions works as long as it exists on a ladder program with PIDRUN or PIDCAS instruction, and both exist for the use convenience of PIDRUN or PIDCAS instruction.

(1) PIDRUN

PIDRUN, as a basic PID control instruction, is the instruction taking charge of single PID loop control.

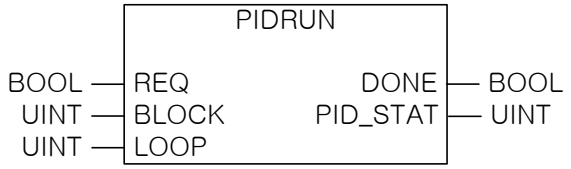

If inputting block number (0 ~ 7) into BLOCK and loop number (0 ~ 31) into LOOP, a loop of the block is selected. PID_STAT displays the operation information for a PID loop, _PID[B]_[L]STATE.

(2) PIDCAS

PIDCAS is the instruction to execute cascade control using two loops.

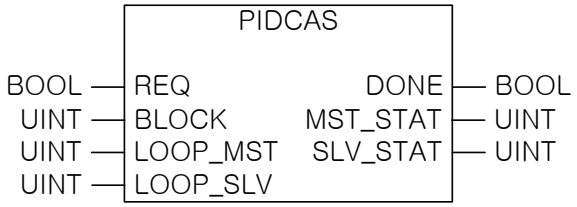

If inputting block number (0 ~ 7) into BLOCK, master loop number (0 ~ 31) into LOOP_MST and slave loop number (0 ~ 31) into LOOP_SLV, the master and slave of the block are selected. At the moment, the block number of both loops should be same. MST_STAT/SLV_STAT shows the operation information on master/slave loops, _PID[B]_[L]STATE.

Notes

Cascade Operation

Basically, master loop inputs its MV to SV of slave loop during operation while slave loop executes its operation by using SV receiving from master loop.
Besides, both loops always mutually observe part of operation information on each loop (i.e. conversion from/to windup, manual mode and/or auto mode conversion).

(3) PIDINIT

It initializes the setting and state of a PID loop. At the moment, the initialized area is the setting and state of the designated block[B] and loop[L], and 0 is inputted to every setting of the loop(bit is off.

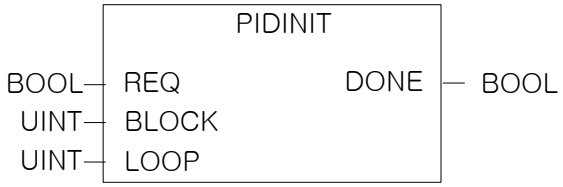

If inputting block number (0 ~ 7) into BLOCK and loop number (0 ~ 31) into LOOP, a loop of the block is selected.

(4) PIDPRMT

PIDPRMT changes the major settings of PIDRUN including SV, T_s, K_p, T_i and T_d to user-defined values.

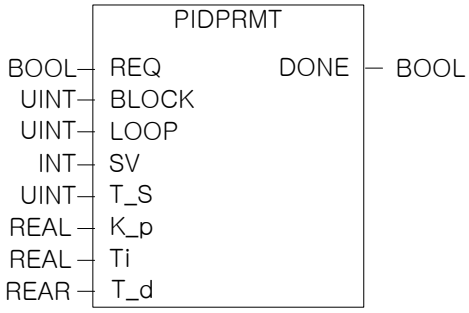

If inputting block number (0 ~ 7) into BLOCK and loop number (0 ~ 31) into LOOP, a loop of the block is selected.

14.5 PID Flag Configuration

The table shows the flag configuration when using the built-in PID function for XGR.

Symbol	K device area	Data type	Description
PID[B][L]MAN	%KX[0+1050B+L]	BIT	Select PID output (0: auto, 1: manual)
PID[B][L]PAUSE	%KX[32+1050B+L]	BIT	PID Pause (0: STOP/RUN 1:PAUSE)
PID[B][L]REV	%KX[64+1050B+L]	BIT	Select PID operation (0: forward, 1:reverse)
PID[B][L]AW2D	%KX[96+1050B+L]	BIT	Prohibit PID Anti Wind-up2 (0:allowed, 1:prohibited)
PID[B][L]REM_RUN	%KX[128+1050B+L]	BIT	PID remote (HMI) execution bit (0:STOP, 1:RUN)
PID[B][L]P_on_PV	%KX[160+1050B+L]	BIT	Select PID proportional calculation source (0:ERR, 1:PV)
PID[B][L]D_on_ERR	%KX[192+1050B+L]	BIT	Select PID differential calculation source (0:PV, 1:ERR)
PID[B][L]AT_EN	%KX[224+1050B+L]	BIT	Set PID auto-tuning (0:Disable, 1:Enable)
PID[B][L]MV_BMPL	%KX[256+1050B+L]	BIT	MV non-impact conversion when converting PID mode(A/M) (0:Disable, 1:Enable)
PID[B][L]SV	%KW[24+1050B+32L]	INT	PID target value (SV)
PID[B][L]T_s	%KW[25+1050B+32L]	WORD	PID operation cycle (T_s)[0.1ms]
PID[B][L]K_p	%KD[13+525B+16L]	REAL	PID P – constant (K_p)
PID[B][L]T_i	%KD[14+525B+16L]	REAL	PID I - constant (T_i)[sec]
PID[B][L]T_d	%KD[15+525B+16L]	REAL	PID D – constant (T_d)[sec]
PID[B][L]d_PV_max	%KW[32+1050B+32L]	WORD	PID PV variation limit
PID[B][L]d_MV_max	%KW[33+1050B+32L]	WORD	PID MV variation limit
PID[B][L]MV_max	%KW[34+1050B+32L]	INT	PID MV max. value limit
PID[B][L]MV_min	%KW[35+1050B+32L]	INT	PID MV min. value limit
PID[B][L]MV_man	%KW[36+1050B+32L]	INT	PID manual output (MV_man)
PID[B][L]STATE	%KW[37+1050B+32L]	WORD	PID State
PID[B][L]ALARM0	%KX[592+16800B+512L]	BIT	PID Alarm 0 (1:T_s setting is small)
PID[B][L]ALARM1	%KX[593+16800B+512L]	BIT	PID Alarm 1 (1:K_p is 0)
PID[B][L]ALARM2	%KX[594+16800B+512L]	BIT	PID Alarm 2 (1:PV variation limited)
PID[B][L]ALARM3	%KX[595+16800B+512L]	BIT	PID Alarm 3 (1:MV variation limited)
PID[B][L]ALARM4	%KX[596+16800B+512L]	BIT	PID Alarm 4 (1:MV max. value limited)
PID[B][L]ALARM5	%KX[597+16800B+512L]	BIT	PID Alarm 5 (1:MV min. value limited)
PID[B][L]ALARM6	%KX[598+16800B+512L]	BIT	PID Alarm 6 (1:AT abnormal cancellation state)
PID[B][L]ALARM7	%KX[599+16800B+512L]	BIT	PID Alarm 7
PID[B][L]STATE0	%KX[600+16800B+512L]	BIT	PID State 0 (0:PID_STOP, 1:PID_RUN)
PID[B][L]STATE1	%KX[601+16800B+512L]	BIT	PID State 1 (0:AT_STOP, 1:AT_RUN)
PID[B][L]STATE2	%KX[602+16800B+512L]	BIT	PID State 2 (0:AT_UNDONE, 1:DONE)
PID[B][L]STATE3	%KX[603+16800B+512L]	BIT	PID State 3 (0:REM_STOP, 1:REM_RUN)
PID[B][L]STATE4	%KX[604+16800B+512L]	BIT	PID State 4 (0:AUTO_OUT, 1:MAN_OUT)
PID[B][L]STATE5	%KX[605+16800B+512L]	BIT	PID State 5 (0:CAS_STOP, CAS_RUN)
PID[B][L]STATE6	%KX[606+16800B+512L]	BIT	PID State 6 (0:SLV/SINGLE, 1:CAS_MST)
PID[B][L]STATE7	%KX[607+16800B+512L]	BIT	PID State 7 (0:AW_STOP, 1:AW_ACT)
PID[B][L]PV	%KW[38+1050B+32L]	INT	PID Present value (PV)
PID[B][L]PV_old	%KW[39+1050B+32L]	INT	PID previous present value (PV_old)
PID[B][L]MV	%KW[40+1050B+32L]	INT	PID Output value (MV)
PID[B][L]MV_BMPL_val	%KW[41+1050B+32L]	WORD	PID non-impact operating memory
PID[B][L]ERR	%KD[21+525B+16L]	DINT	PID control error
PID[B][L]MV_p	%KD[22+525B+16L]	REAL	PID output P component
PID[B][L]MV_i	%KD[23+525B+16L]	REAL	PID output I component
PID[B][L]MV_d	%KD[24+525B+16L]	REAL	PID output D component
PID[B][L]DB_W	%KW[50+1050B+32L]	WORD	PID deadband setting (operating after stabilizing)
PID[B][L]Td_lag	%KW[51+1050B+32L]	WORD	PID differential function Lag filter

Symbol	K device area	Data type	Description
PID[B][L]AT_HYS_val	%KW[52+1050B+32L]	WORD	PID auto-tuning hysterisis setting
PID[B][L]AT_SV	%KW[53+1050B+32L]	INT	PID auto-tuning SV setting
PID[B][L]AT_step	%KW[54+1050B+32L]	WORD	PID auto-tuning state indication (setting by user prohibited)
PID[B][L]INT_MEM	%KW[55+1050B+32L]	WORD	PID internal memory (setting by user prohibited)

* ☐ : Area prohibited from user's setting
* B : XGR CPUH PID block number [0~7]
* L : PID loop number [0~31]

%KX[0+1050B] ~ %KX[287+1050B] area is the common bit area of the block PID loop. The bit state and settings of each bit are collected and arranged on the front of each PID block. Therefore, 32 bits, the max. no. of loops that PID function may use in a block is collected, forming a double-word, and the state and setting of each bit are saved in good order of bits.

%KW0024 ~ %KW0055 area is the individual data area for PID block 0 and loop 0, where the setting and state of block 0 and loop 0 are saved. The loop setting for the PID loop such as SV, dPV_max, MV_man, T_s, Kp, Ti, Td, MV_max, MV_min and dMV_max are saved in the area, and during the execution of PID function, the state of PID loops such as PV, ETC, MV, MV_rvs, ERR, MVp, MVi, MVd and PV are also saved. A user may change PID setting simply by writing data on the memory and get the result reflected to the next cycle.

%KW0056 ~ %KW1047 area is the memory of loop 1 through 31 with the format of block 0 & loop 0. Each loop independently works and may execute auxiliary operation like the application of cascade. Additionally, the K device memory configuration mentioned in the end of user's manual may help you understand the memory location of PID.

The location and order of the memory area as mentioned above may change without prior notice to improve the product performance.

Notes

1) PID memory statement format
   PID[B][L]MAN B: block, L : loop
   i.e.) _PID3_05MAN : means MAN bit of block 3 and loop 5.

2) Common bit area
   i.e.) _PID3_25PAUSE : because of block 3 and loop 25, it represents the location of %KX[32+1050B+L] = %KX3207.

3) Individual data area
   i.e.) _PID5_30SV : because of block 5 and loop 30, it represents the location of %KW[24+1050B+32L] = %KW6234.

14.5.1 Common bit area

Common bit area is the part that gathers every data consisting of bits for each of 32 loops. It has a double word format of 32 bits as the information on 32 loops for an item; n th bit means the information on the n th loop. m is the value that the loop number, n is converted to a hexadecimal.

(1) _PID[B]_[L]MAN (PID Manual operation enable) - Setting area

K DEVICE AREA : %KX [0+1050B+L]
Data unit : BIT
It determines whether PID function of n th loop is operated manually or automatically(AUTO/MANUAL).
AUTO state outputs the results that PID operation is normally executed while MANUAL state does not execute PID operation and instead, it outputs a use desirable temporary value. At the moment, the output is generated as _PID[B]_[L]MV_man, which is the value a user wishes.
If a bit is off, it is set as [Default] AUTO.

(2) _PID[B]_[L]PAUSE (PID PAUSE mode) - Setting area

K DEVICE AREA : %KX [32+1050B+L]
Data unit : BIT
It makes n th PID loop in pause state.
If converting PAUSE to RUN state again, it continuously controls. Therefore, since control system may result in unexpected results if the system state is changed in PAUSE, PAUSE function should be carefully used.
If the bit is off, [Default] PAUSE is cancelled.

(3) _PID[B]_[L]REV (PID REVerse operation) - Setting area

K DEVICE AREA : %KX64+1050B+L]
Data unit : BIT
It sets whether a control system is forward system or reverse system.
If system state ascends when system input rises, it is called forward system; if it descends when it increases, it is called reverse system.
In case of boiler, the temperature rises as the system input increases, so it is a forward system. On the other hand, in case of cooling system, the temperature drops as the system input rises, so it is a reverse system.
If the bit is off, it is set as [Default] Forward system.

Notes

PID[B][L]PAUSE

If making PID loop in PAUSE state by using PID[B]_[L]PAUSE and PIDPAUSE instruction, every operation stops and it outputs the last calculation before PAUSE state. In the case, if system state is changed, the control system may show unexpected results due to improper control, so PAUSE function should be carefully used.
In the first scan of PLC, since PIDRUN instruction executes initialization, in which PAUSE bit is off, it escapes from PAUSE and turns STOP or RUN state if turning on PLC in PAUSE state.

(4) _PID[B]_[L]AW2D (PID Anti Wind-up 2 Disable) **- Setting area**

K DEVICE AREA : %KX[96+1050B+L]
Data unit : BIT
If the bit is off when a user does not want it, Anti Wind-up2 function is deactivated.
The function of Anti wind-up is detailed in 14.6.
If the bit is off, [Default] Anti Wind-up2 function is enabled.

(5) _PID[B]_[L]REM_RUN (PID REMote RUN) **- Setting area**

K DEVICE AREA : %KX[128+1050B+L]
Data unit : BIT
It is the external operation instruction of PIDRUN.
Being used as an external operation instruction, it functions alike the effect that PIDRUN instruction contact is on/off. Indeed, PIDRUN instruction executes OR operation of "PIDRUN instruction's input condition" contact and the bit to determine whether to execute the operation. If using the function, PIDRUN instruction's operation contact may be assigned to a fixed address, so a user may conveniently use external I/O devices such as HMI.
If the bit is off, [Default] (if contact is off), PIDRUN instruction stops.

(6) _PID[B]_[L]P_on_PV (PID P on PV) **- Setting area**

K DEVICE AREA: %KX[160+1050B+L]
Data unit : BIT
It sets the P operation source of PID loop as PV. P operation is operated with ERR or PV, and P operation using PV is relatively slow moving to stable state, rather using ERR, in an unstable state of instantaneous control due to initial response or disturbance. It means that output fluctuation is not steep and consequently, it does not overburden the driver. However, since the range of internal operation value changes, Anti Wind-up function does not work.
If the bit is off, PID executes P operation with ERR in [Default] state and in case of on, it executes P operation with PV value.

(7) _PID[B]_[L]D_on_ERR (PID D on ERRor) **- Setting area**

K DEVICE AREA : %KX[192+1050B+L]
Data unit : BIT
It sets the D operation source of PID loop as ERR. D operation is operated with ERR or PV, and D operation using ERR may cause excessive input to a driver instantly because D response may have sudden change as SV is changed by a user. To prevent it, D operation uses PV and the default is also set to be D operation using PV. If using ERR without the algorithm, the bit should be on. If the bit is off, PID executes D operation with PV in [Default] state, and in ON state, it executes D operation with ERR value.

Notes

PID[B][L]REM_RUN

The bit is saved in K device even though PLC stops, so if PLC stops and operates with the bit ON (i.e. power failure), the system is initialized from the first scan and then, PIDRUN instruction operates.

(8) _PID[B]_[L]AT_EN (PID AutoTuning ENable) **- Setting area**

K DEVICE AREA : %KX[224+1050B+L]
Data unit : BIT
It auto-tunes the PID loop. AT finds out T_s (operation cycle) and PID coefficients (K_p, T_i and T_d) approximately.
Before operating AT, it is necessary to set PID[B]_[L]HYS_val item and the functions of AT is detailed in 14.6.
If the bit is off, [Default] AT function is disabled and AT is executed at the ascending edge.

(9) _PID[B]_[L]MV_BMPL (PID MV BuMPLess changeover) **- Setting area**

K DEVICE AREA : %KX[256+1050B+L]
Data unit : BIT
It calculates MV through operation, reflects it into the internal state and stabilizes MV so that MV is to be smoothly continued as soon as the PID loop is converted from manual output mode to auto output mode. The function is different in algorithm for single operation and cascade operation but both operate with the bit.
If the bit is on (the bit of master loop in case of cascade), it executes Bumpless changeover. In case of off, [Default] Bumpless changeover function is disabled.

Notes

PID[B][L]AT_EN

The bit is initialized to off as soon as PLC is turned to RUN mode, so when PLC stops and operates with the bit on(i.e. power failure), the system is initialized from the first scan and then, it does not go to AT mode again. At the moment, PID setting does not have any change, so the system operates with the state before PLC stops.

PID[B][L]MV_BMPL

For instance, assuming that manual output value is 1000, it is turned to auto output and 2000 output is to be generated, a driver operates the system with 1000 and instantly receives 2000 at the moment of mode conversion. Then, if the bit is ON, the PID loop outputs at the moment of conversion, gradually increases and operates it so that 2000 is to be outputted.

14.5.2 Individual data operation

The individual data area of block B and loop L is %KW[24+1050B+32L] ~ %KW[55+1050B+32L].

(1) _PID[B]_[L]SV (PID Set-point Value) **- Setting area**

K DEVICE AREA : %KW[24+1050B+32L]
Data unit : INT [-32768 ~ 32767]
It sets SV of a loop.
As described in the previous chapter, it is the system state that a user wishes. The state is indicated with numbers and it should be converted, based on PV along the system's gain and inputted accordingly.
For instance, if temperature is 50℃, SV should be set to 5000 when controlling the temperature at 50℃ in a system in which PV is sensed for 5000.

(2) _PID[B]_[L]T_s (PID Sampling Time) **- Setting area**

K DEVICE AREA : %KW[25+1050B+32L]
Data unit : WORD [0 ~ 65535]
It sets the sampling time of a loop.
Sampling time is the cycle of control operation and represents the time cycle of control operation. The sampling time may be set, at least, from 0.1ms up to 6553.5 ms in 0.1ms, and it is also set at the unit of 1 integer per 0.1ms. That is, if setting the sampling time to 100ms, input 1000 to _PID[B]_[L]T_.
Especially, if a user sets the sampling time to 0, it is set in scan cycle control mode and control operation is executed every scan, so the max. speed control operation is executed in the current environment.
If it exceeds the current scan speed due to two short sampling time, _PID[B]_[L]STATE alarm bit is displayed.

(3) _PID[B]_[L]K_p (PID Proportional Gain) **- Setting area**

K DEVICE AREA : %KD[13+525B+16L]
Data unit : REAL [-3.40282347e+38 ~ -1.17549435e-38 , 0 , 1.17549435e-38 ~ 3.40282347e+38]
It sets the proportional constant(K_p) of a loop. K_p is multiplied by P, I and D(Proportional, integral and differential) among PID control effects, so if K_p is increasing, differential effect is also larger while integral effect is reduced.
Especially, if _PID[B]_[L]K_p setting is 0, it does not execute P control. For details, refer to 14.6.
K_p can be set within the range of real number(REAL).

Notes

PID[B][L]SV

PID changes the output (MV) through several operations until SV=PV. Therefore, if SV is 0, PIDRUN seems not to operate. For instance, if the current temperature is 20 degrees and the SV of simple heater of which PV is 2000 (20 degrees) is set to 0, PID outputs 0 as its MV and will not output until PV is cooled down to 0 (0 degrees).

(4) _PID[B]_[L]T_i (PID integral Time gain) **- Setting area**

K DEVICE AREA : %KD[14+525B+16L]
Data unit : REAL [-3.40282347e+38 ~ -1.17549435e-38 , 0 , 1.17549435e-38 ~ 3.40282347e+38]
It sets the integral time constant (T_i) of a loop. T_i divides I (integra) term out of PID control effects, so if T_i is increasing, the integral effect is reduced.
Especially, if _PID[B]_[L]T_i setting is 0, it does not execute I control and for details, refer to 14.6.
T_i may be set to the range of real number (REAL).

(5) _PID[B]_[L]T_d (PID derivative Time gain) **- Setting area**

K DEVICE AREA : %KD[15+525B+16L]
Data unit : REAL [-3.40282347e+38 ~ -1.17549435e-38 , 0 , 1.17549435e-38 ~ 3.40282347e+38]
It sets the differential time constant(T_d). T_d is multiplied by D(differential) term out of PID control effects, so if T_d is increasing, differential effect is increasing.
Especially, if _PID[B]_[L]T_d setting is 0, it does not execute D control and for details, refer to 14.6.
T_d may be set to the range of real number(REAL).

(6) _PID[B]_[L]dPV_max (PID delta PV MAXimum limit) **- Setting area**

K DEVICE AREA : %KW[32+1050B+32L]
Data unit : WORD [0 ~ 65535]
It sets the PV variation of a loop.
In an actual control, PV does not always reflect the accurate state of system. In detail, PV may be reflected with undesirable signals such as sensor's malfunction, noise and disturbance. To prevent it, if PV is changed over the value set in _PID[B]_[L]dPV_max, it protect it primarily, avoiding any change exceeding the value. On the other hand, if _PID[B]_[L]dPV_max is set to small, the convergence time may take longer because system's change is reflected late, make sure to set it suitable for the characteristics of a system.
Especially, if the value is set to 0, the function does not work.

(7) _PID[B]_[L]dMV_max (PID delta MV MAXimum limit) **- Setting area**

K DEVICE AREA : %KW[33+1050B+32L]
Data unit : WORD [0 ~ 65535]
It limits the MV variation of a loop.
If control system is rapidly changed, system may not be stabilized or be subject to trouble or unstable operation due to overload on a driver. To prevent it, it limits the output variation of a control. Especially, if the value is set to 0, the function does not operate.

(8) _PID[B]_[L]MV_max (PID MV MAXimum limit) - Setting area

K DEVICE AREA : %KW[34+1050B+32L]
Data unit : INT [-32768 ~ 32767]
It limits the max value of MV of a loop.
It prevents overload by limiting the max. output of a control delivered to output device and cuts off any system error. In addition, it prevents any overflow or other undesirable value from being delivered.

(9) _PID[B]_[L]MV_min (PID MV MINimum limit) - Setting area

K DEVICE AREA : %KW[35+1050B+32L]
Data unit : INT [-32768 ~ 32767]
It limits the min. value of MV of a loop.
It prevents overload by limiting the min. output of a control delivered to output device and cuts of any system error. In addition, it prevents any overflow or other undesirable value from being delivered.

(10) _PID[B]_[L]MV_man (PID MANual MV variable) - Setting area

K DEVICE AREA : %KW[36+1050B+32L]
Data unit : INT [-32768 ~ 32767]
It designates MV if a loop is set as a manual operation. The value set here outputs the value of PID[B]_[L]MV_man as the MV of a loop if _PID[B]_[L]MAN of common bit area is on.

(11) _PID[B]_[L]STATE (PID STATE) - Setting disabled

K DEVICE AREA : %KW[37+1050B+32L]
Data unit : WORD [h00 ~ hff] or BIT
It indicates the state of abnormal state of a loop.
It is located at the address of %KW[37+1050B+32L] while each bit(16) has 16 meanings respectively. At present, a part of them are used, among 16 bits.
STATE is on only for a moment that the related operation occurs while the operation is cancelled, it returns to off.
The low 8 bits of STATE(_PID[B]_[L]ALARM 0 ~ _PID[B]_[L]ALARM 7) represent kinds of abnormal state of a loop while the high 8 bits of STATE(_PID[B]_[L]STATE 0 ~ _PID[B]_[L]STATE 7) indicates the control state of a loop.
Assignment of each bit is as follows.
PID[B][L]ALARM 0 : skipping an operation because T_s setting is too small.
PID[B][L]ALARM 1 : K_p is 0.
PID[B][L]ALARM 2 : PV variation is limited.
PID[B][L]ALARM 3 : MV variation is limited.
PID[B][L]ALARM 4 : MV max. value is limited.
PID[B][L]ALARM 5 : MV min. value is limited.
PID[B][L]ALARM 6 : abnormally canceled during AT.
PID[B][L]STATE 0 : PID operation is in progress(effective in case of PLC run)
PID[B][L]STATE 1 : PID AT is in progress.
PID[B][L]STATE 2 : PID AT is complete.
PID[B][L]STATE 3 : PID is operating remotely by _PID[B]_[L]REM_RUM bit.
PID[B][L]STATE 4 : PID mode is manual output mode.
PID[B][L]STATE 5 : PID loop belongs to cascade.
PID[B][L]STATE 6 : PID loop is the cascade master loop.
PID[B][L]STATE 7 : Anti Wind-up is operating during PID operation.

(12) _PID[B]_[L]PV (PID Process Variable) **- I/O area**

K DEVICE AREA : %KW[38+1050B+32L]
Data unit : INT [-32768 ~ 32767]
It represents the PV of a loop.
PV is the indicator showing the current state of the system and the input from sensor is saved into U device of CPU via input devices such as Analog input module. The value should be moved to _PID[B]_[L]PV by using instructions such as MOV every time it scans. Refer to the examples described in the end of the user's manual.

(13) _PID[B]_[L]PV_old (PID previous PV) **- Setting disabled**

K DEVICE AREA : %KW[39+1050B+32L]
Data unit : INT [-32768 ~ 32767]
It is used for integral/differential operation to the previous PV state of a step of the related loop and it is recommended to refer to it, if necessary. If inputting a temporary value, it may be subject to malfunction.

(14) _PID[B]_[L]MV (PID Manipulated output Variable) **- I/O area**

K DEVICE AREA : %KW[40+1050B+32L]
Data unit : INT [-32768 ~ 32767]
It represents MV of a loop.
MV is a signal source to drive a system and conversely as described in 12) _PID_PV, it is delivered to U device by using instruction such as MOV every time it scans and it is used as the input of system drive via output devices such as Analog output module. Also, refer to the examples of program.

(15) _PID[B]_[L]MV_BMPL_val (PID MV BuMPLess changeover VALue) **- Setting disabled**

K DEVICE AREA : %KW[41+1050B+32L]
Data unit : WORD [0 ~ 65535]
A loop saves the information necessary for operating Bumpless changeover. The memory is automatically set and inputted by means of PID internal operation while it is prohibited for a user to set the value.

Notes

Bumpless Change Over

In case PID control returns to auto output mode after being converted to manual output mode, it increases the output from 0 like a control system that is newly started, by which the system is subject to mode conversion impact. That is, a certain output is allowed in manual mode and as soon as it is converted to auto mode, the output rises from 0 again. To prevent the mode conversion impact, it uses MV_BMPL function, which detects the last state of manual mode of the current system during the mode conversion and induces it to continue the control output from the part smoothly. By expanding it, master loop detects the slave loop state with master loop MV_BMPL allowed and creates the control output to be smoothly continued.

(16) _PID[B]_[L]ERR (PID ERRor value) - Setting disabled

K DEVICE AREA : %KD[21+525B+16L]
Data unit : DINT [-2747483648 ~ 2747483647]
It represents the current error of a loop.
In PID, error is defined as SV – PV. It is used as an indication how far the current state is distance from the desirable state, and if error is 0, it means that the control system state reaches the desirable state. Therefore, ideal control system can be defined that if control starts, error is rapidly reduced from its excessive state and reaches to the normal state, the vibration is minimized and the residual drift(stable state error) is maintained as 0.

(17) _PID[B]_[L]MV_p (PID MV Proportional component) - Setting disabled

K DEVICE AREA : %KD[22+525B+16L]
Data unit : REAL [-3.40282347e+38 ~ -1.17549435e-38 , 0 , 1.17549435e-38 ~ 3.40282347e+38]
It represents the proportional control value of a loop. If the current system error is known, proportional, integral and differential control outputs can be independently calculated. By comparing three outputs, the operation state of control system and PID control may be accurately comprehended while MV is calculated with the sum of MV_p, MV_i and MV_d.

(18) _PID[B]_[L]MV_i (PID MV Integral component) - Setting prohibited

K DEVICE AREA : %KD[23+525B+16L]
Data unit : REAL [-3.40282347e+38 ~ -1.17549435e-38 , 0 , 1.17549435e-38 ~ 3.40282347e+38]
It displays the integral control value of a loop.

(19) _PID[B]_[L]MV_d (PID MV Derivative component) - Setting prohibited

K DEVICE AREA : %KD[24+525B+16L]
Data unit : REAL [-3.40282347e+38 ~ -1.17549435e-38 , 0 , 1.17549435e-38 ~ 3.40282347e+38]
It displays the differential control value of a loop.

(20) _PID[B]_[L]DB_W (PID DeadBand Width) - Setting area

K DEVICE AREA : %KW[50+1050B+32L]
Data unit : WORD, Range [0 ~ 5000]
It sets the deadband of a loop. The only positive value is available and it operates within the area set up and down the SV. That is, if PV is within the section of [SV – DB_W] ~ [SV + DB_W], it is necessary to substitute SV for PV(can not checked externally). If setting the value to 0, the function does not work.

Notes

Deadband
It is used to eliminate small output flunctuation resulting from small change of state as PV approaches to SV. If inputting a value into DB_W during PID control, a deadband is formed as much as up/down of SV. If PV follows SV and enters the inside of deadband during control, ERR is forcibly calculated as 0 and the change of MV stops as long as PV remains in the section. That is, it's like the pause to control in a stable section and through it, a driver receives input uniformly while it operate stably and helps it not to be overburdened. It is recommended to use it after the system is properly stablized in a section set as deadband. The reason is because a control may suffer from temporary transient phenomena while entering into the deadband.

(20) _PID[B]_[L]Td_lag (PID Td lag filter) **- Setting area**

K DEVICE AREA : %KW[51+1050B+32L]
Data unit : WORD [0 ~ 65535]
It sets the primary delay filter, based on the differential calculation, of a loop and makes the differential effect reacting as an instant impact more smooth and constantly. If setting it higher, it may result in more smooth differential output. If setting it as 0, the function does not work. It is normally used to avoid excessive force on drivers as the system output slightly vibrates by differential vibration.

(21) _PID[B]_[L]AT_HYS_val (PID Autotuning HYSteresis value) **- Setting area**

K DEVICE AREA : %KW[52+1050B+32L]
Data unit : INT [-32768 ~ 32767]
It sets a proper directional deadband during AT of a loop. _PID[B]_[L]AT_HYS_val value operates as a high deadband when PV increases or as a low deadband when PV decreases. Successful AT results depend on setting it properly. How to set _PID[B]_[L]AT_HYS_val is described in 14.7.4.

(22) _PID[B]_[L]AT_SV (PID Autotuning SV) **- Setting area**

K DEVICE AREA : %KW[53+1050B+32L]
Data unit : INT [-32768 ~ 32767]
During AT of a loop, AT_SV used for SV is separately set. AT vibrates 3 times up and down around AT_SV.

(23) _PID[B]_[L]AT_step (PID Auto-tuning step) **- Setting prohibited**

K DEVICE AREA : %KW[54+1050B+32L]
Data unit : INT [-32768 ~ 32767]
It displays the AT operation state of the loop. _PID[B]_[L]AT_step may have a value between 0 ~ 7; 0 indicates AT operation is not started while 7 indicates AT operation is complete. And, 1, 3 and 5 are PV increasing section and 2, 4 and 6 are the PV decreasing section.

⚠ Caution

1) **Setting prohibited** : It is prohibited to set any item with the indication of **–Setting prohibited** among the items described in the above common bit area and individual loop area. The area not only displays operation information to a user but also saves the information necessary for operation, so the control system may malfunction if setting it temporarily.
2) **I/O area** : _PID[B]_[L]PV and _PID[B]_[L]MV are **– I/O area** respectively, so it is necessary to connect to external devices(A/D, D/A and others).

Notes

Transient state and normal state

1) Transient state : the state that a control system starts controlling and searching for a desirable control state. It may have sudden output fluctuation, and as a step in which integral value is stabilized, it may have vibration and overshoot.

2) Normal state : the state that a control system reaches a desirable state via transient state. Vibration is completely eliminated but it may have residual drift and output has little change.

High / low deadband

If analog component of a sensor is converted to digital via AD device, almost signals may have even a part of noise component. The PID control instruction executes auto-tuning by using the converted value, during which it increases and decreases PV from SV 3 times. During the procedure, if noise is inputted at a moment of SV=PV, there is high/low convergence once but it may recognize it as several conversions. That is, it's like a digital switch's chattering. To overcome it, PID control uses unidirectional deadband (hysteresis), with which the deadband value is applicable only for high section of SV when the system's PV increases toward SV, and vice versa.

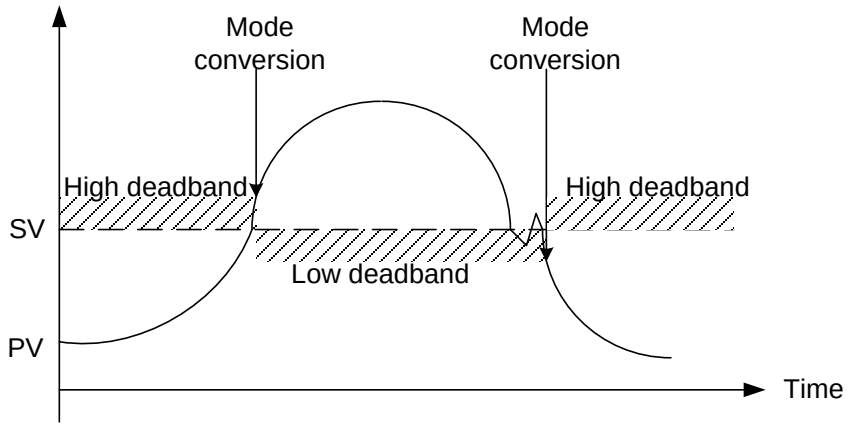

14.6 Convenient Functions of PID Instruction

The chapter describes additional functions that may be conveniently used with PID instructions.

14.6.1 Various control methods including PID

The most commonly used PID controls are P control, PD control and PID control. Meanwhile, if expecting several characteristics(mostly stabilization), ID control, I control and D control, which are slightly complicate than the above-listed controls, are often used. To enable various controls, PIDRUN instructions support the function to allow or prohibit such controls by P, I and D components.
For instance, in case of P control, it may be structured by setting _PID[B]_[L]Ti and _PID[B]_[L]Td as 0. If PI control is desired, set _PID[B]_[L]Kp and _PID[B]_[L]Ti only and input 0 to _PID[B]_[L]Td. Then, if you wish to use ID control, set _PID[B]_[L]Kp as 0 and set the remaining _PID[B]_[L]Ti and _PID[B]_[L]Td.
Likewise, ID control sets 0 to _PID[B]_[L]Kp and substitutes each ID control coefficient to _PID[B]_[L]Ti and _PID[B]_[L]Td. However, interestingly, ID control has 0 output theoretically once setting 0 to _PID[B]_[L]Kp(refer to equation 14.3.2 through 14.3.5). In addition, actual PIDRUN instruction calculates MVp = 0 and K_p = 1 internally if inputting 0 to _PID[B]_[L]Kp, enabling ID control, I control and D control.

14.6.2 Operation and function of Anti Wind – up

PIDRUN instruction supports two wind-up prevention functions; Anti Wind-up 1 and Anti Wind-up 2. The former one that is basically supported may work for controls including I control, PI control, ID control and PID control and may not be cancelled. The operation principle is to limit MVi(integral result) to _PID[B]_[L]MV_max and _PID[B]_[L]MV_min.
On the other hand, Anti Wind-up 2 is organically connected MVp(proportional term result). If only with MVp, MV may reach ±(_PID[B]_[L]MV_max) because of a large system error, MVi maintains the previous value without any calculation. Therefore, if an error is large, it induces PV to move to SV only with MVp, not integral nor differential, resumes I control and prevents MVi from being excessively accumulated. On the other hand, a user may cancel an operation if Anti Wind-up 2 makes _PID[B]_[L]AW2D bit on the common bit area ON. And, like PI control and PID control, it works for a control accompanying with P control and I control.

14.6.3 Operation and function of Auto-tuning

PIDRUN instruction has the AT function that tests a system through several basic settings and calculates _PID[B]_[L]T_s, _PID[B]_[L]K_p, _PID[B]_[L]T_i and _PID[B]_[L]T_d, suitable for the system. The values such as _PID[B]_[L]MV_min, _PID[B]_[L]MV_max, _PID[B]_[L]AT_HYS_val and _PID[B]_[L]AT_SV should be set before AT while the AT function sets MV three times in good order of _PID[B]_[L]MV_max and _PID[B]_[L]MV_min, operates it, checks the system's state(PV) response, measures the time and vibration degree to reach to the AT target value(AT_ST) and finally, calculates _PID[B]_[L]T_s, _PID[B]_[L]K_p, _PID[B]_[L]T_i and _PID[B]_[L]T_d suitable for the measurements. To calculate the accurate tuning value, refer to the AT setting described in 14.7.4 and induce the AT operation accordingly.

Notes

Auto-tuning

At the moment when a series of works end, AT may automatically substitutes _PID[B]_[L]T_s, _PID[B]_[L]K_p, _PID[B]_[L]T_i and _PID[B]_[L]T_d, which are calculated, to the corresponding positions, so a user must note that _PID[B]_[L]T_s, _PID[B]_[L]K_p, _PID[B]_[L]T_i and _PID[B]_[L]T_d that are used before are to be eliminated.

14.6.4 Operation and function of cascade

PIDCAS instruction executes CASCADE PID control by operating two PID loops. In general, CASCADE PID control is used for chemical process or temperature control through fuel and at the moment, two loops used are called master and slave, respectively. For instance, assuming temperature control through fuel's flowrate, in case of single loop PID control, it opens fuel valve and control fuel's flow, with which it controls the temperature of heating furnace. Therefore, a single PID loop is a system to indirectly control temperature. As such, the application of cascade PID requires installing fuel's flowmeter on a system, which is divided into flow control and temperature control. That is, slave loop controls a flow by using a valve while master loop controls temperature by using the flow. In the case, master loop delivers a desirable flow to slave loop, which monitors, in turn, the flowmeter so that fuel is supplied as much as flow needed by master loop and controls flow by using a valve. Simply, slave loop operates only with the target flow received from master, irrespectively of temperature.
Now, looking into the cascade operation, master loop measures temperature(PV_mst) at relatively later cycle than slave loop, calculates the flow value(MV_mst) calculated for a desirable temperature(SV_mst) and delivers it to slave loop.
Slave loop sets the flow value(MV_mst) received from master as its target(SV_slv), measures the fuel input at more frequency than master loop and adjusts the valve open/close(MV_slv).
Therefore, cascade plays a role to deliver the MV(MV_mst) of master loop to SV of slave loop(SV_slv) with two loop operated.
If slave loop is converted to manual output state, master output is not used, so master loop is also converted to manual output mode.
At the moment, the manual mode _PID[B]_[L]MAN bit is not on in the master loop. At the moment when slave loop is converted to auto output mode again, master loop is also converted to auto output mode, when if _PID[B]_[L]MV_BMPL is on, it exchanges state data between two loops, smoothly executing the conversion.
If slave loop is caught in anti-windup, master loop operates in PIDPAUSE mode. As such, despite of anti-windup, if it increases or decreases the target slave value(SV_mst), the second windup for the entire cascade loop is prevented. The function operates in accordance with the conditions without setting and _PID[B]_[L]PAUSE bit is not on.

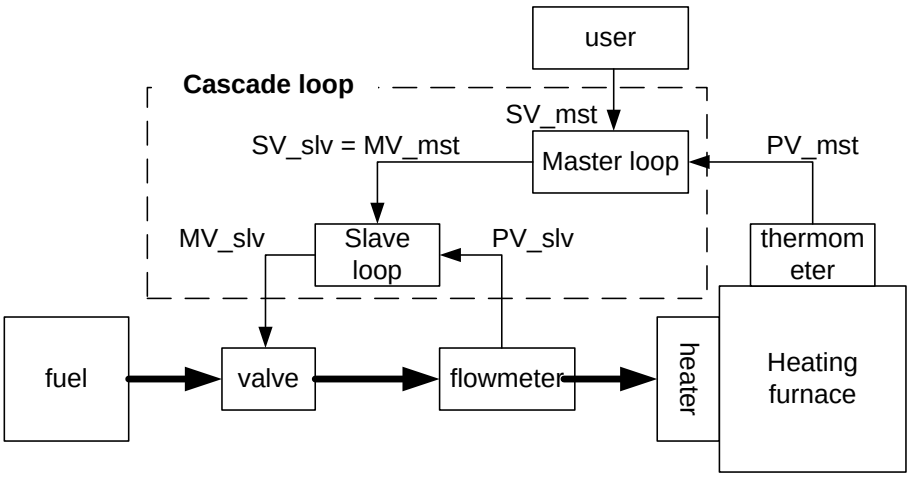

Notes

Cascade system's auto-tuning

Cascade system's AT auto-tunes slave loop first and then, it does master loop. However, to auto-tune slave loop, it is necessary to anticipate how much SV the slave lop receives from master loop, and if setting the value as AT_SV, the slave loop operates as an independent loop. AT performance depends on the anticipated value. Once it starts working properly after the AT of slave loop, it executes AT of master loop.

14.7 Directions of PID Instructions

The chapter describe the directions of PID instructions.
Please refer to the manual for the details on CPU, special module and XG5000 functions.

14.7.1 Hardware Configuration

The example system is structure as follows.

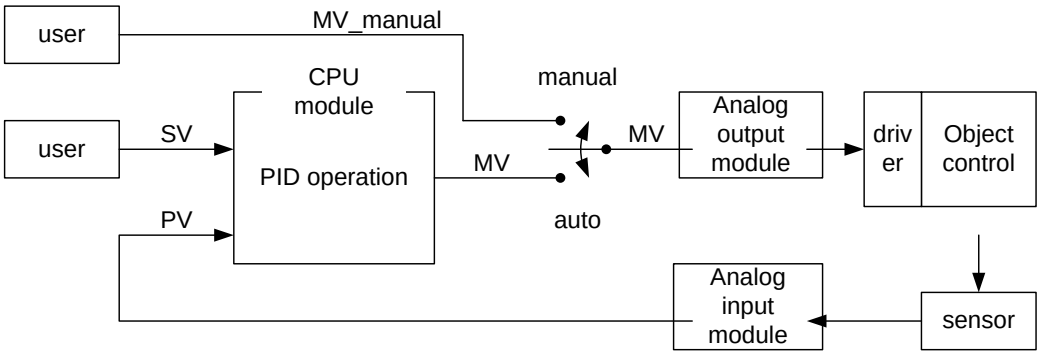

(1) CPU (XGR-CPUH)

CPU is a PID control because PID operation is executed here. A control receives the data sensed by an input module, calculates the output through operation and delivers it to an output module. At the moment, a user should connect I/O and design(tune) the inside of PID control. In general, input and output use Analog input modules and Analog output modules, respectively.

(2) Analog module and parameter registration

To use Analog module, it is necessary to register them to a project and set them properly. First of all, install analog modules and use the I/O synchronization function of I/O information module to register them.

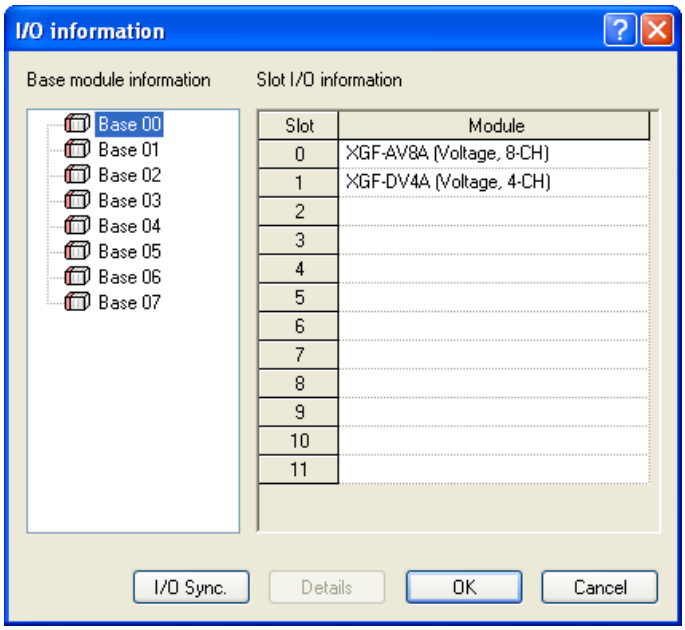

Once a module is registered, it is necessary to register a parameter to use among the parameters assigned to the module, as the global parameter.

(3) Analog input module (XGF-AV8A)

It functionally receives the state of an object to control from a sensor and delivers it to CPU. Analog input module channel 0 receives 0 ~ 5 V as its input and delivers the output, a digital value to PLC. Then, XGF-AV8A has 8 channels(CH0 ~ CH7). AGF-AV8A setting may be changed in the I/O parameter setting window, which appears when selecting I/O parameter in 'Parameter' item of project window. Change CH 0 to 'Operate' and set the input range to 0 ~ 5V(set along a sensor). Output data type is the PV of PID control, and the range of the value for PID control is to be set between 0 ~ 1000.

Now, the 0 ~ 5 signal detected from a sensor during Analog input module operation is converted to a digital value between 0 ~ 1000, which is x2000, and it is delivered to PLC.

The following figure shows the setting window of XGF-AV8A in XG5000.

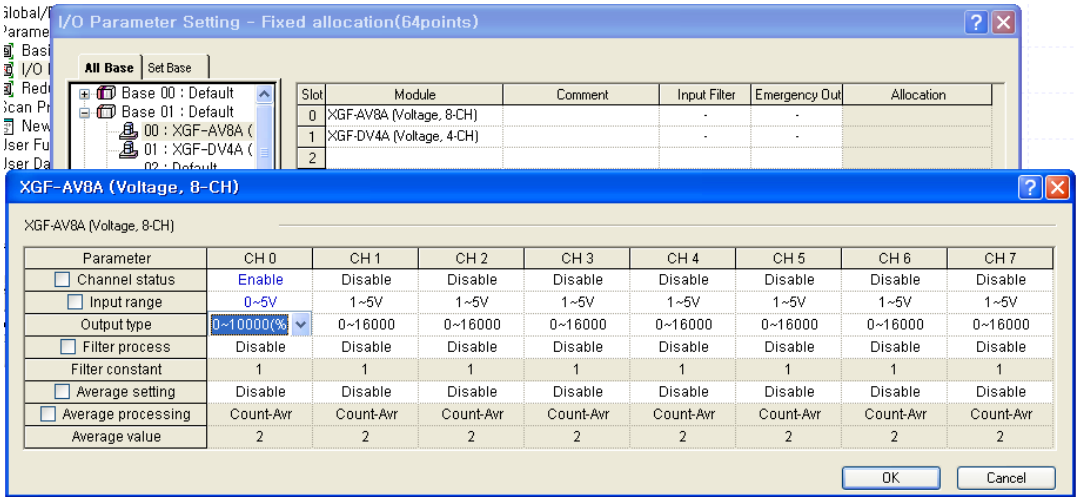

(4) Analog output module (XGF-DV4A)

Analog output module functionally converts the control output digital value, which is created by PLC's control operation, to 4mA ~ 20mA and delivers it to a drive of an object to control. XGF-DV4A model has totally 4 channels and like XGF-AC8A, it may be changed in the I/O parameter setting window. It is necessary to change CH0 to 'Operate' and set the output range to 0 ~ 5V (set along a driver). The MV digital output of 0 ~ 1000, which is created by PID control operation is reduced as small as 1/2000 and it is delivered to the signal of the driver.

The figure shows the setting window of XGF-DV4A in XG5000.

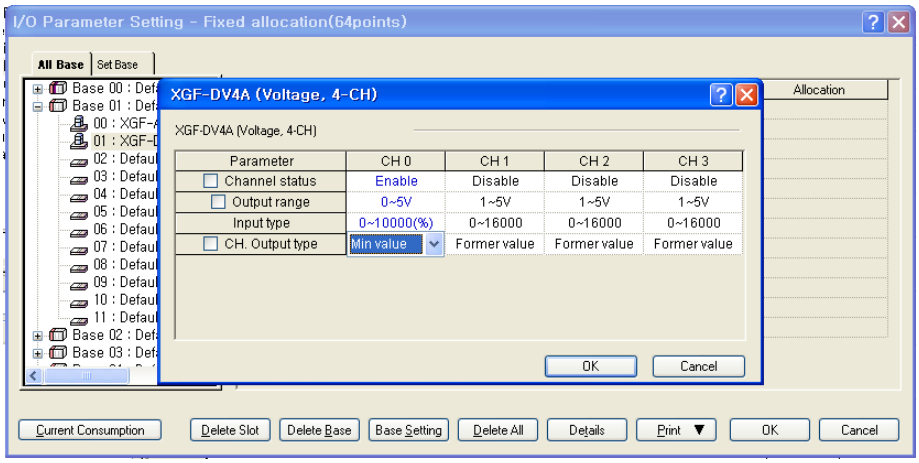

(5) Register parameter

To approach Analog input module and Analog output module, it is necessary to register the parameter of each module prior to use. A parameter of every special module installed may be automatically registered through the auto registration of special module parameter of Edit menu after opening Global Parameter in the project window.

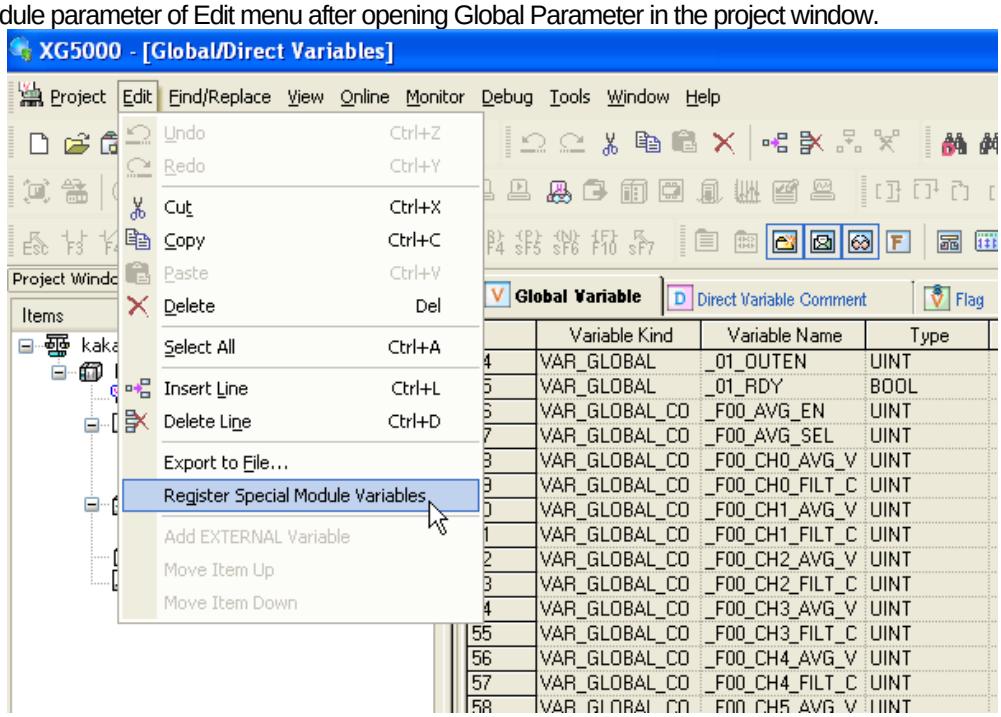

Among them, select parameters necessary for executing the ladder program and register them as the local parameters.

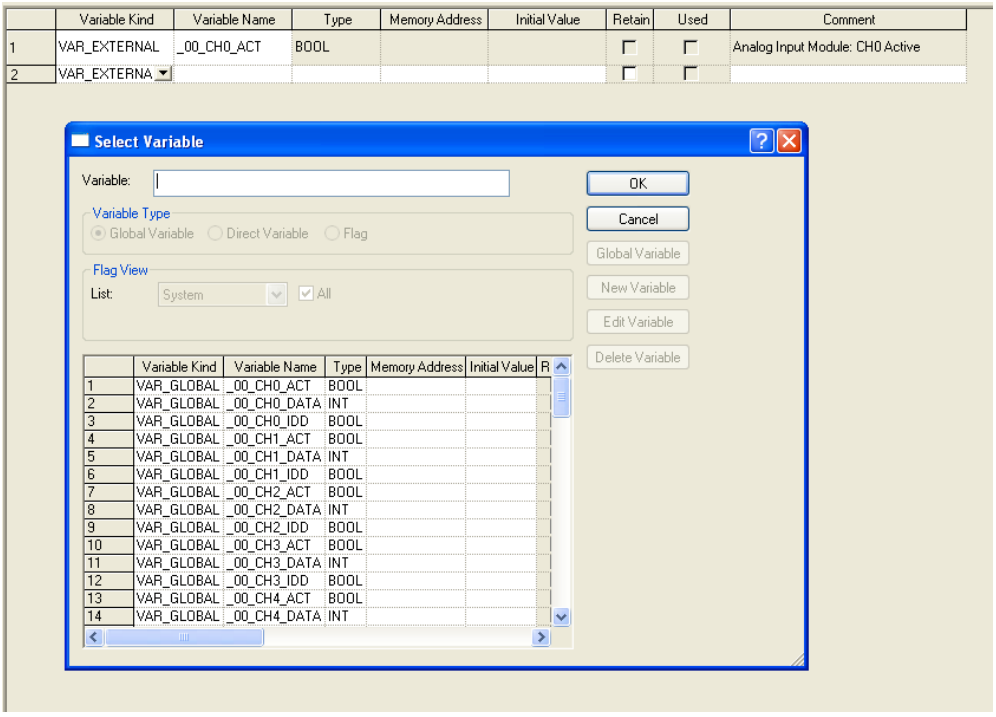

(6) Sensor and driver

Besides Analog output module, sensor and driver are media to deliver a state to a control from an object to control and deliver the output of a control to an object to control from a control. Therefore, the output created by a sensor should be used as an input of Analog input module while the output created by Analog output module should be used as the input of driver. For instance, if a sensor is current type of 4mA ~ 20mA, it should be Analog input module type of 4mA ~ 20mA. In

addition, if a driver is voltage type of 0V ~ 5V, Analog output module should be also voltage type of 0V ~ 5V.
The output of Analog output module is used as a drive signal of a driver. If it is used directly as the motive power of driver, PLC may be subject to malfunction.

(7) Object to control

The system uses water level control system as its object to control. The water level system is designed to supply water to a water tank of which bottom is slightly open and maintain a desirable water level. The water in a tank uniformly flows out and the increase/decrease of water depends on the water inflow by means of a pump. The structure of the water control system is as follows.

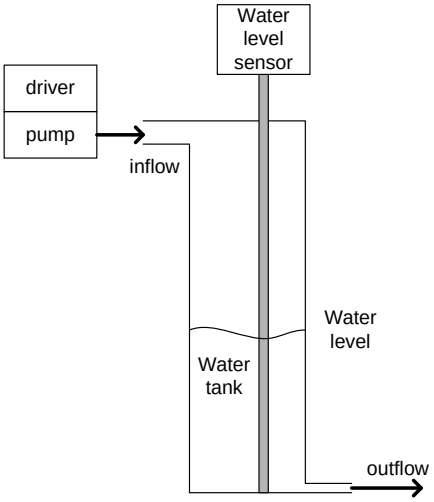

14.7.2 Program example 1

The figure shows a program example to execute PID control by using Analog input module and Analog output module. (but, PID constant and SV value are set in the parameter monitor window in the program)

L1 : delivers Analog input data to PV of PIDRUN instruction by using constant On contact.

L5 : If %MX0 bit is on, it executes the control operation of PIDRUN block 0 and loop 0 and if it is complete, it activates D/A output. If D/A output is deactivated, the module outputs the value set when it is registered.

L10 : Delivers MV output of PIDRUN instruction to Analog output data by using constant ON contact.

14.7.3 PID control

(1) Register parameter monitor

Register PID parameters in the parameter monitor window and execute control setting.
If clicking the right button of mouse in the parameter monitor window and selecting, “Register in Parameter/Comment”, it is possible to view “Select Parameter/Device” window. If selecting PID in “List”, canceling “View All” and inputting 0 to “Block No.” and “Parameter No.”, a user can see the parameter to save the setting and state of block 0 and loop 0. If selecting all parameters and checking “OK”, it is possible to monitor parameters and change the values even during the program RUN.

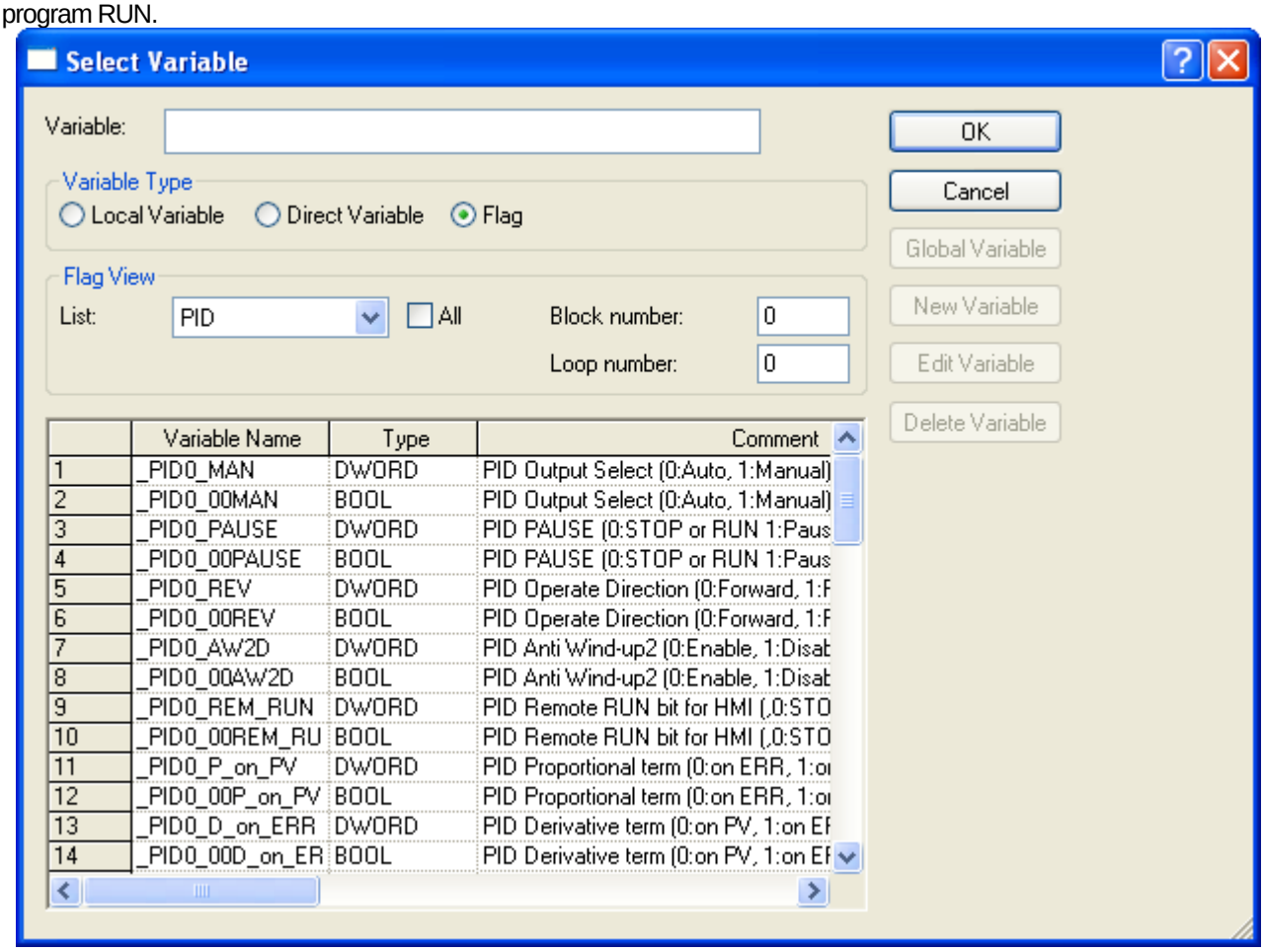

(2) Getting SV

To set SV, it is necessary to know PV conversion value of a system that a user desires. Simply, if a user desires to maintain the water level at 250mm, it searches for the PV value indicating 250mm. The value can be found by numerical analysis but it is more accurate to check it by using the response of an object to control experimentally. In the system, it was analyzed that PV outputs 8333 when the water level is 250mm, but as a result of operating it actually, the sensor output value was 8250. The cause of the error must be attributable to inaccurate sensor, error of measurement reference point and others. Therefore, 8250, the value actually measured should be used as the state value of water level 250mm. The value is also used as SV when controlling 250mm.

(3) Control setting

Download the previously created program to PLC and start monitoring. Then, set the parameters registered to the parameter monitor window. The following figure shows the view of example program's parameter monitor window.

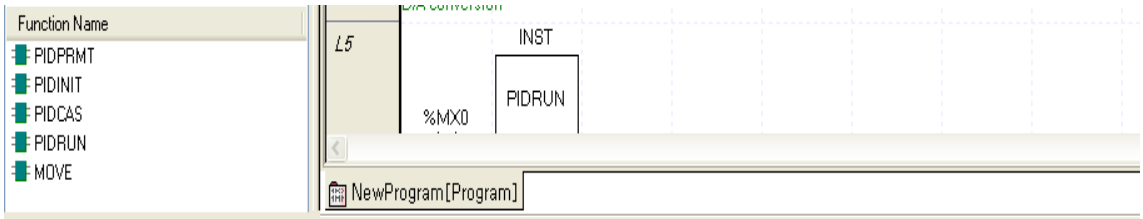

	PLC	Program	Variable/Device	Value	Type	Device/Variable	Comment
1	NewPLC	NewProgram	⊟ INST		PIDRUN		
2	NewPLC	NewProgram	INST.REQ		BOOL		
3	NewPLC	NewProgram	INST.BLOCK		UINT		
4	NewPLC	NewProgram	INST.LOOP		UINT		
5	NewPLC	NewProgram	INST.DONE		BOOL		
6	NewPLC	NewProgram	INST.PID_STAT		WORD		
7	NewPLC	<GLOBAL>	_0100_CH0_DATA		INT	%UW1.0.2	아날로그입력 모듈: 채널0 변환값
8	NewPLC	<GLOBAL>	_0101_CH0_DATA		INT	%UW1.1.3	아날로그출력 모듈: 채널0 입력값
9	NewPLC	<GLOBAL>	_0101_CH0_OUTEN		BOOL	%UX1.1.32	아날로그출력 모듈: 채널0 출력상태설정
10							

Settings include three; SV, K_p and MV_max.
SV is set to 8250, which is actually measured and Kp is given with 5 temporarily. MV_max is an item to limit the max. value of MV and is set to 1000 in accordance with ADC / DAC module.

(4) Control state observance using trend monitor

It activates trend monitor among the monitor functions of XG5000.

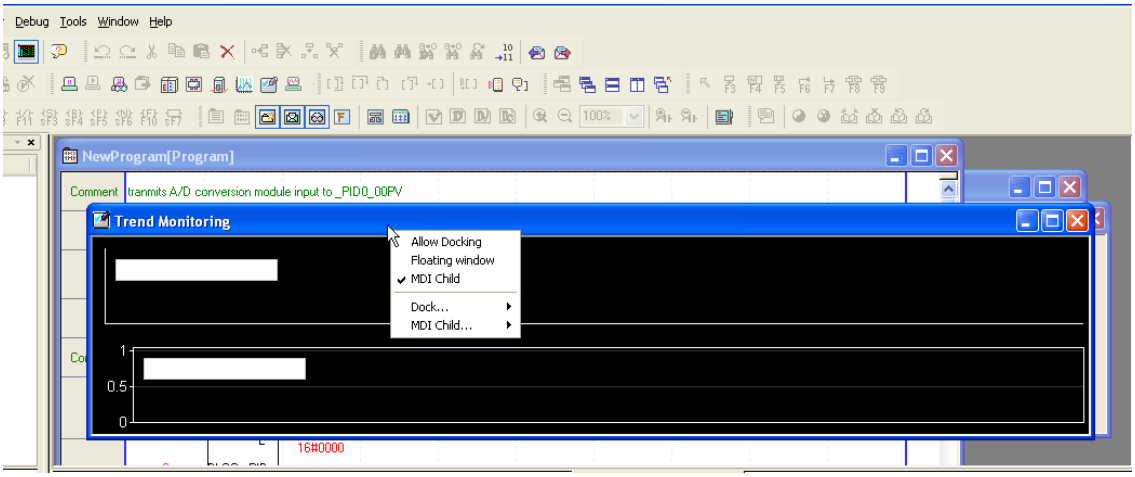

By allowing the docking of trend monitor, arrange it properly.

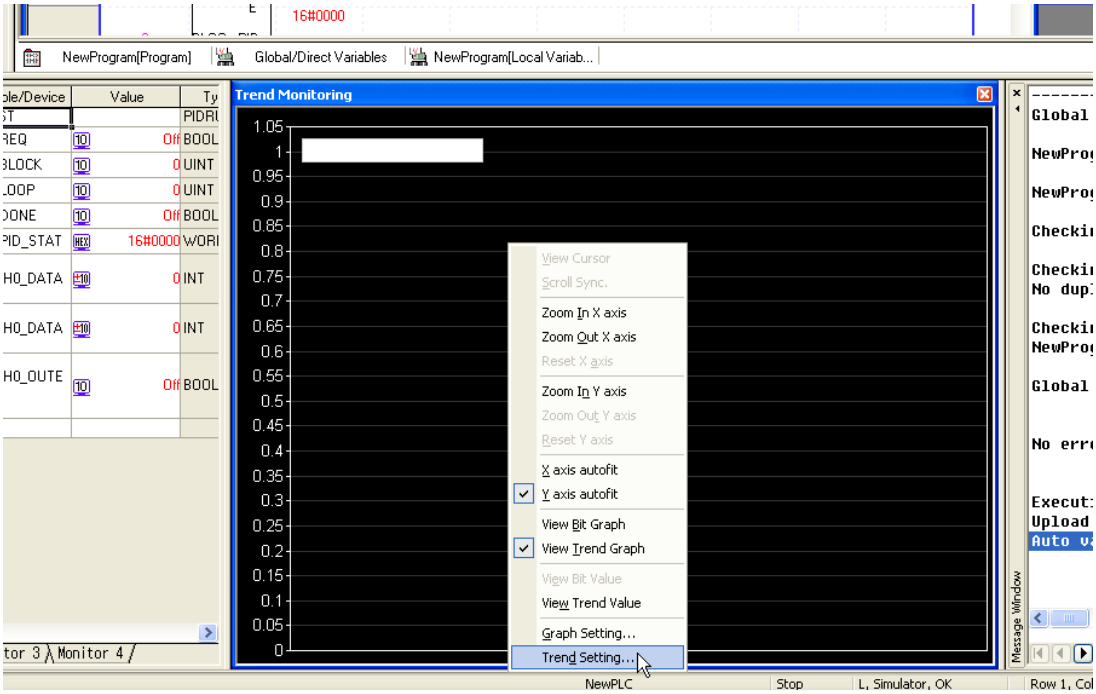

By means of trend setting, register the data to observe.

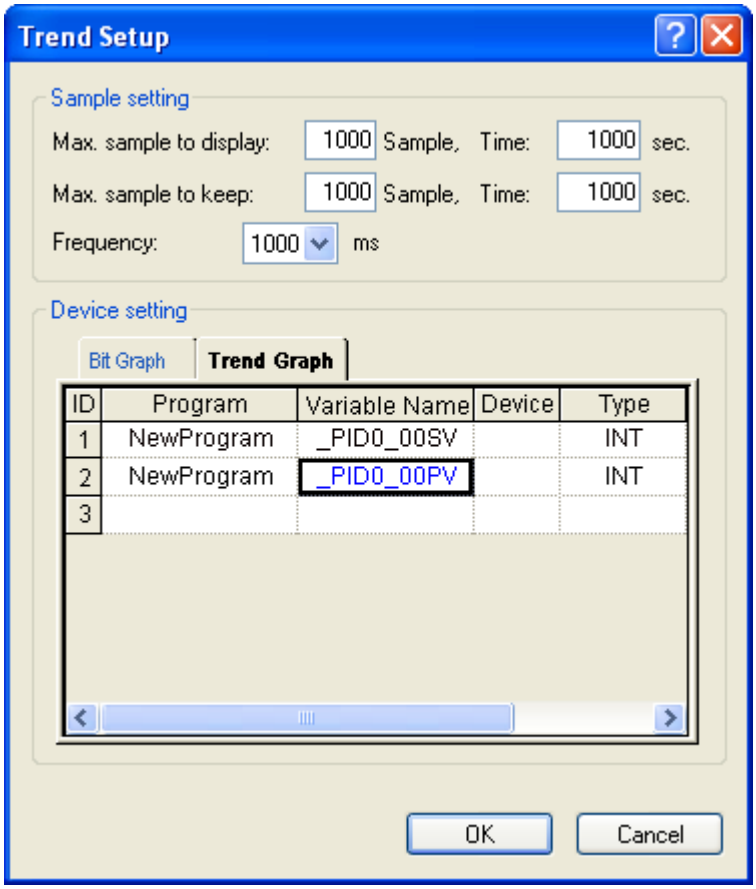

Set the monitoring cycle as 200ms, select the trend graph tab on the bottom and register the parameters to monitor such as SV and PV of block 0 and loop 0.

(5) Program execution (here, an example is introduced to show how to find a parameter manually and for auto tuning, refer to 14.7.4)

If contact (%MX0) is ON, the system starts operating.

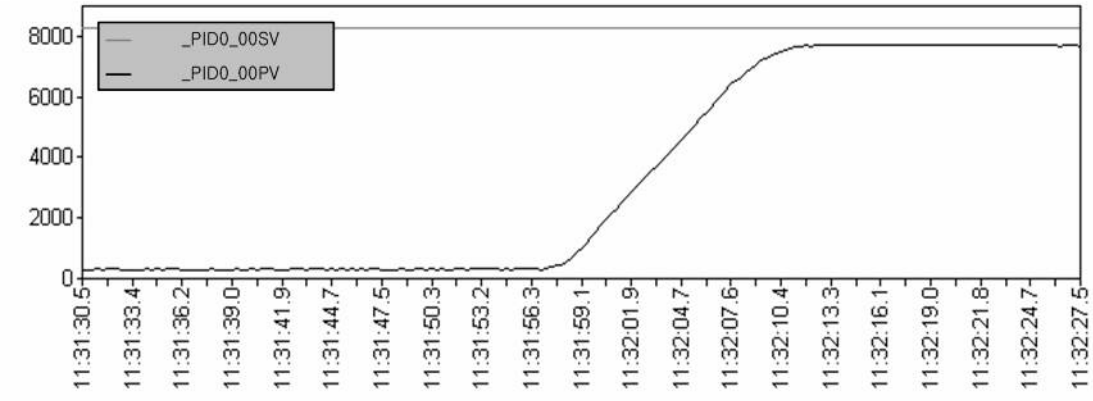

Increase K_p to 100 and restart it.

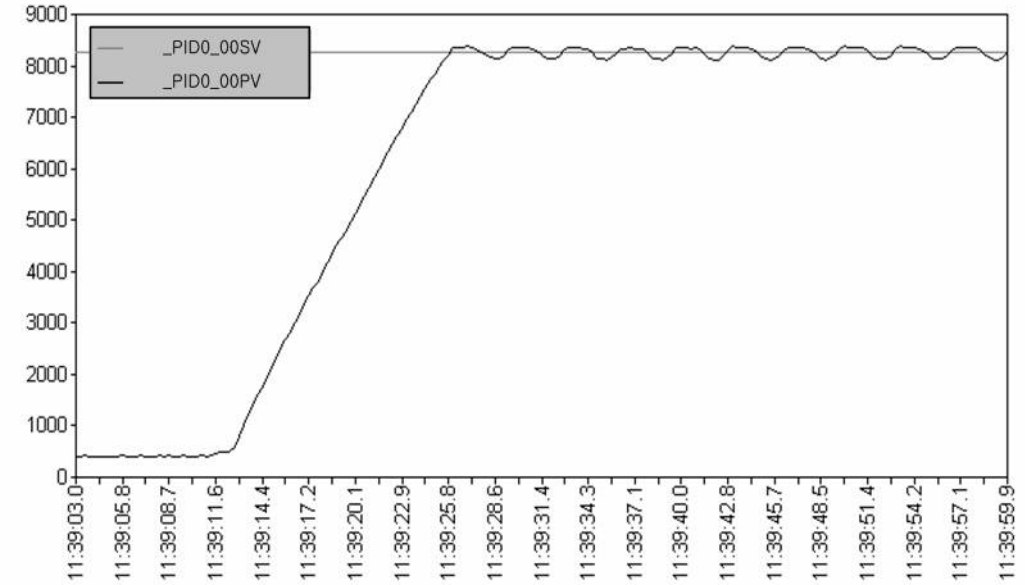

It can be found that it uniformly and permanently vibrates due to too large K_p.

Set 'K_p = 20, T_i = 100'.

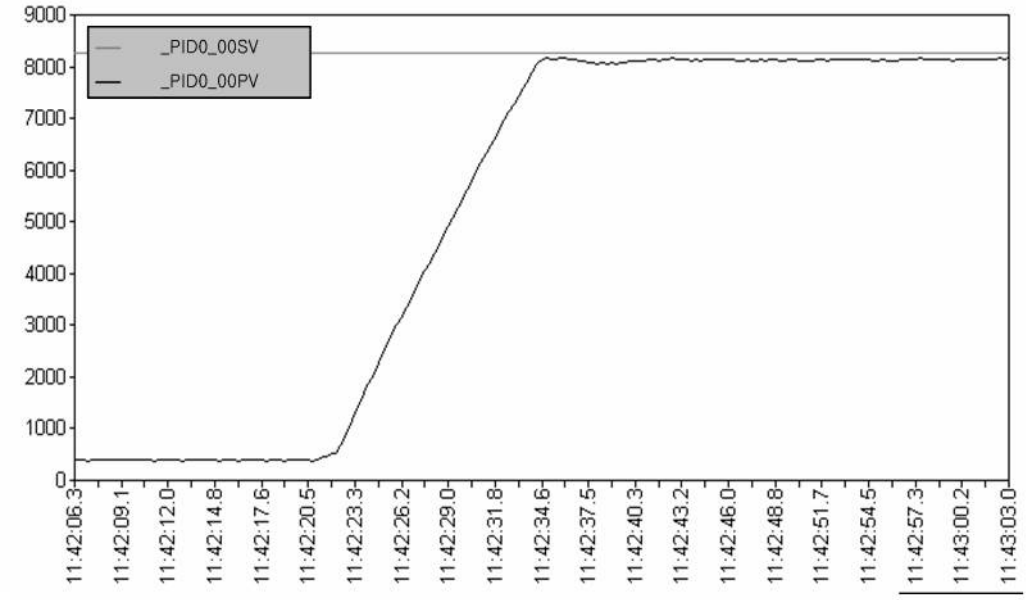

Due to too large T_i , the normal state residual drift lasts and there is a slight overshoot.

Set K_p = 10, T_i =1.

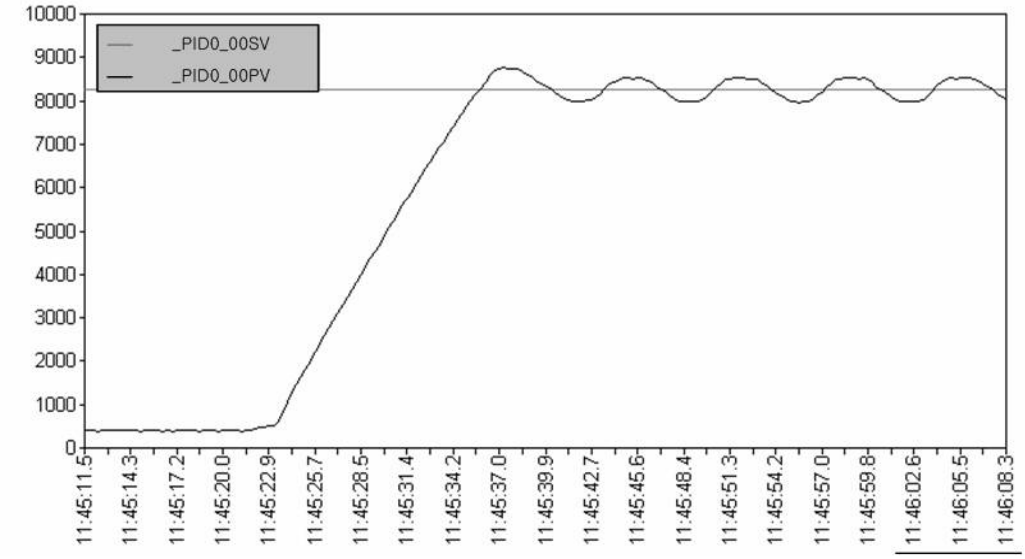

Due to too small T_i, PV is slowly fluctuating.

Set K_p = 10, T_i = 5.

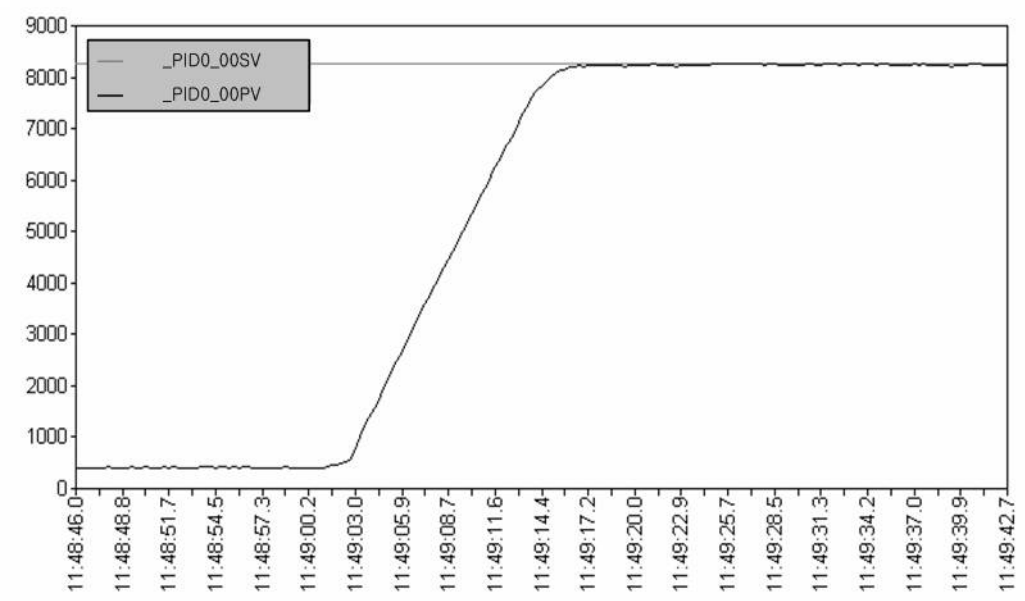

It shows the satisfactory results.

The current system is the system slow enough to control only with PI, so it executes PI control only.
Therefore, tuning results are K_p = 10, T_i = 5, T_d = 0.

14.7.4 AT (Auto-tuning) operation

While using and operating the system described in the above 14.7.3, especially using AT function, check the setting of AT. The basic AT function may operate with the system not operated, that is, when the system has a PV less than _PID[B]_[L]AT_SV (smaller one in case of reverse operation). Basically, AT executes different operation by stages while step increases form 0 to 7 and the step of the current loop can be checked by _PID[B]_[L]AT_step. In PIDSTOP state, AT step is 0 but once AT starts, it increases (automatically) from 0 up to 7, at which AT stops. Therefore, it may be subject to malfunction if a user manipulates the steps.
To avoid duplicate, apply the setting after trying to execute up to (4) of the above 14.7.3.
Now, set _PID[B]_[L]AT_SV. Although _PID[B]_[L]SV value was already set in the above, PV vibrates the system during AT so to be over _PID[B]_[L]SV, so it is necessary to set a SV value suitable for the case harmful to the system into _PID[B]_[L]AT_SV. In other cases, make sure to set _PID[B]_[L]AT_SV like _PID[B]_[L]SV. _PID[B]_[L]AT_SV value is used only during AT and once AT is complete, it automatically operates the system, based on _PID[B]_[L]SV.
Next, set _PID[B]_[L]MV_min and _PID[B]_[L]MV_max. In AT, _PID[B]_[L]MV_min and _PID[B]_[L]MV_max are respectively regarded as the min./max. outputs of the system. During AT, both values change in 3 cycles, depending on the system speed(how fast PV approaches SV). For instance, in case of _PID[B]_[L]MV_min = 0, _PID[B]_[L]MV_max = 10000, the system operation signal(MV) that is delivered to motor or heater repeats the output, 0 → 10000 → 0 three times. As such, in case there is any possibility that a sudden change overburden the system, it is necessary to set _PID[B]_[L]dMV.
Then, set _PID[B]_[L]HYS_val, which is used only during AT. As a deadband that occurs when PV approaches SV, it occurs higher than the reference during ascent while it does lower than the reference during descent. That is, if SV is 5000 and _PID[B]_[L]HYS_val is 100, AT increases PV by maintaining MV as _PID[B]_[L]MV_max up to 5100 (SV + _PID[B]_[L]HYS_val) and then, it maintains MV as _PID[B]_[L]MV_min up to 4900 (SV - _PID[B]_[L]HYS_val), executing tuning while reducing PV.

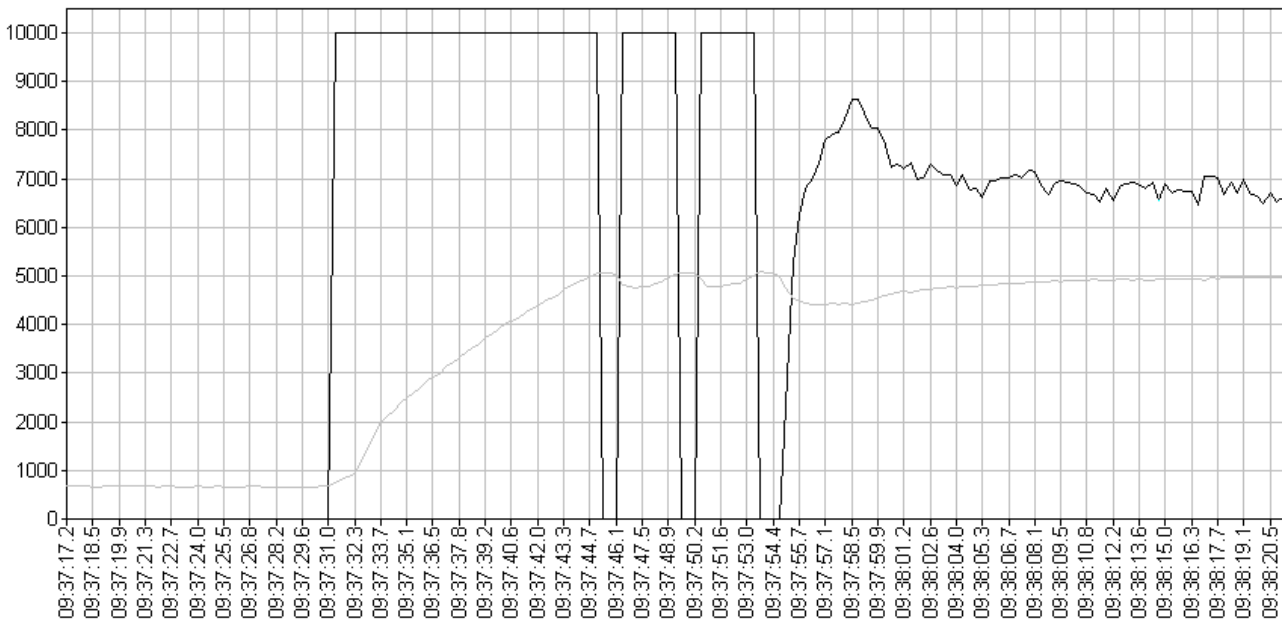

The above graph is the water level waveform gained by setting _PID[B]_[L]HYS_val value (50 in the example) properly and MV should have 3 square waveforms as seen in the figure.

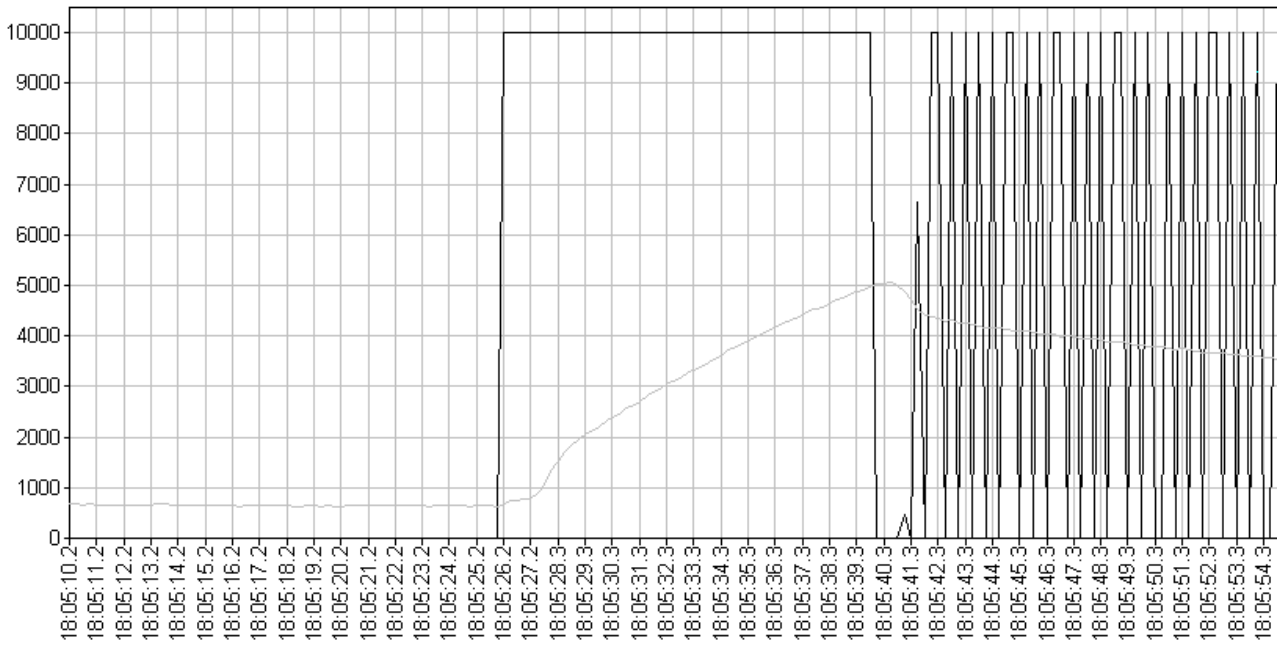

In the above graph, _PID[B]_[L]HYS_val is set too small (10 in the figure), so if no.3 square wave form on MV, which is gained from the water level waveform, is not clear, accurate AT operation may not be secured. In addition, too large _PID[B]_[L]HYS_val is inputted, the system may slow down disadvantageously.

14.7.5 Program example 2

The figure shows the program that PID constant and SV setting are changed in the program. If PIDPRMT contact (%MX01) is on, user defined values like U_SV, U_Ts, U_Kp, U_Ti and U_Td are inputted as PID parameters and it is also allowed to use monitor window as presented in 14.7.3.

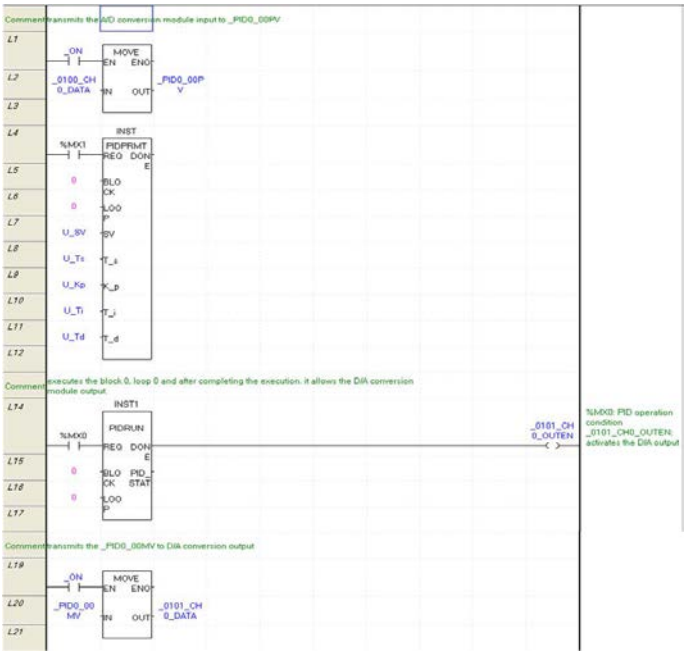

14.7.6 Cascade operation

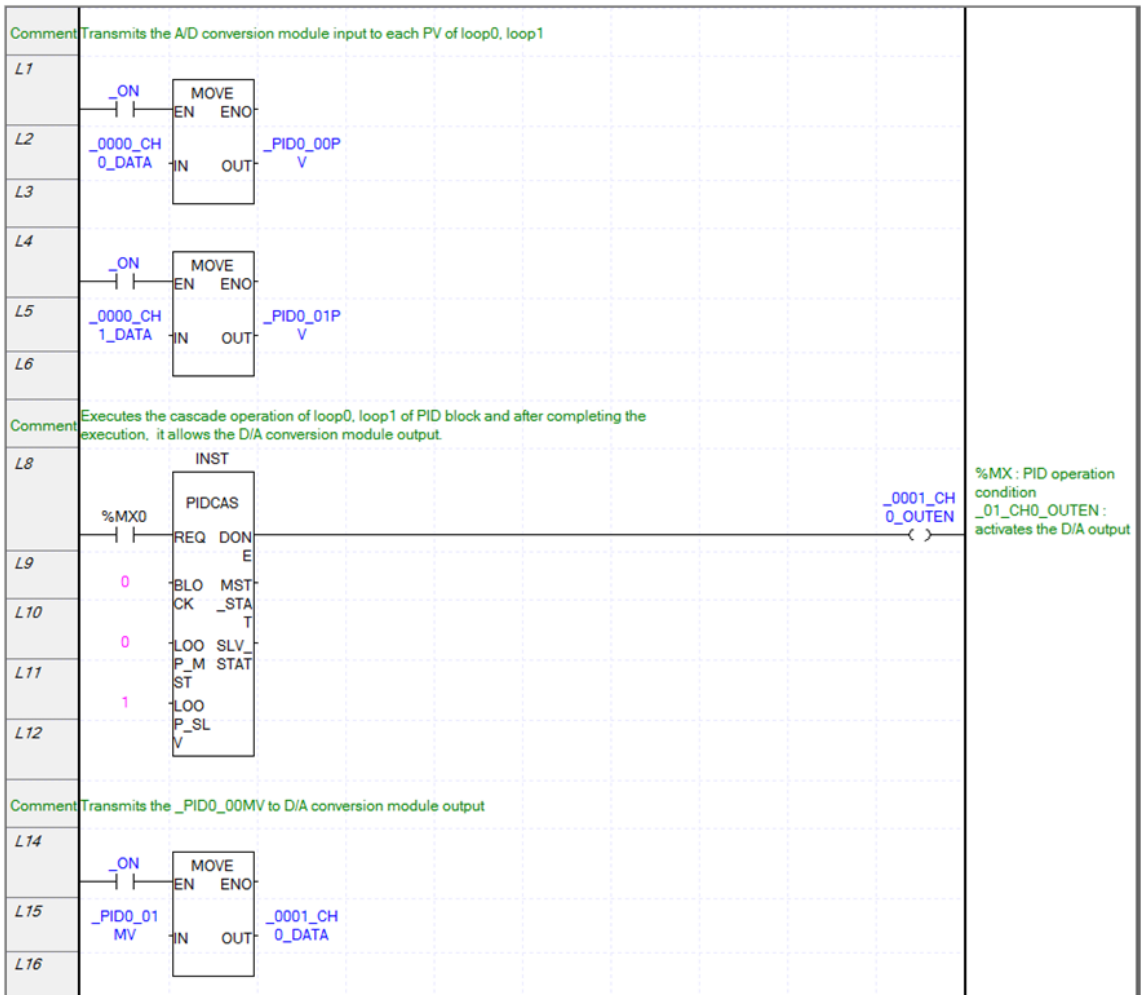

The above ladder program is the view of cascade configuration, based on the following block diagram.

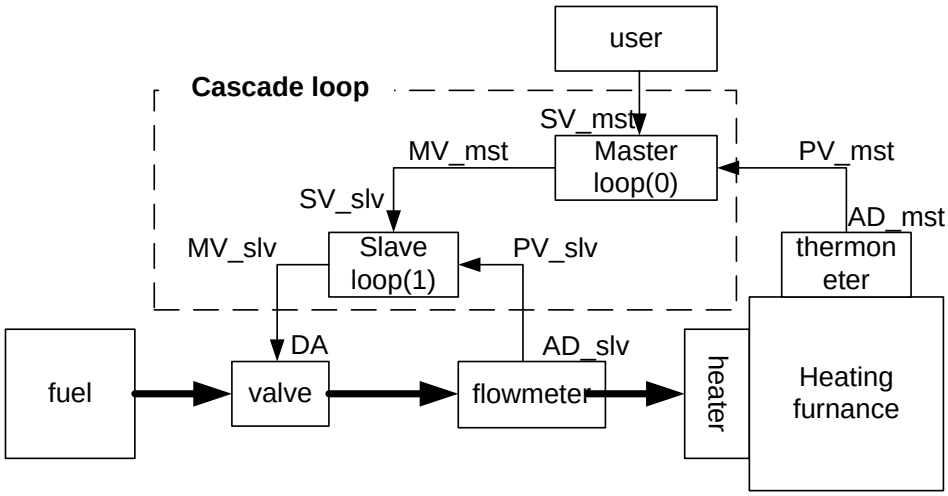

The above block diagram is the system to measure the temperature of heating furnace, supply fuel to the heater and maintain a desirable temperature.
Also, to control the signal delivered to fuel valve more actively, if installing a flowmeter and structuring a slave loop, it supplies a uniform fuel on the operation of slave loop when master loop instructs a temporary value of fuel.

Chapter 15 Troubleshooting

The chapter describes types of potential errors that occur while operating the system, causes of errors, how to detect them and corrective measures.

15.1 Basic Troubleshooting Procedure

To improve the reliability of a system, it is important to take a corrective measure promptly if a trouble occurs as well as to use highly reliable devices. To operate a system immediately, it is the most important to quickly detect potential causes of a trouble and take corrective measures. To troubleshoot the system correctly, make sure to take the following cautions and procedures.

(1) Check by visual inspection

Please check the followings visually.

- Operation status(Stop, Run)
- Power On/Off status
- I/O device status
- Wiring status(I/O wiring, expansion and communication cable)
- Check the status of each display(POWER LED, RUN/STOP LED, I/O LED and etc), connect to peripherals and check the operation condition and program

(2) Check any abnormality

Please observe how a fault changes by executing the followings.

- Move the key switch to STOP and turn it On/Off

(3) Restricting Range

Estimate by which factor a fault occurs by the following methods.

- Is it from the PLC or external factor?
- I/O module or others?
- PLC program?

15.2 Troubleshooting

The above stated detection methods, description for error codes and measures are explained by phenomenon.

Trouble	
If Power LED is Off	Measures taken when Power LED is Off
If WAR. LED is On	Measures taken when WAR/ LED is On
If Err. LED is On	Measures taken when Error LED is On
If Run/Stop LED is Off	Measures taken when Run/Stop LED is Off
If I/O module does not work properly	Measures taken when I/O module does not work properly
If writing a program is not possible	Measures taken when writing program is not possible
If Sync. cable is not properly installed	Measures taken when Sync. cable is not properly installed
If master switching occurs	Measures taken when master switching occurs
If redundant operation does not work when adding CPU	Measures taken when redundant operation does not work when adding CPU
If master switching fails	Measures taken when master switching fails

15.2.1 Action when POWER LED is off

The paragraph describes the orders of taking a measure if POWER LED is Off when turning it on or during operation.

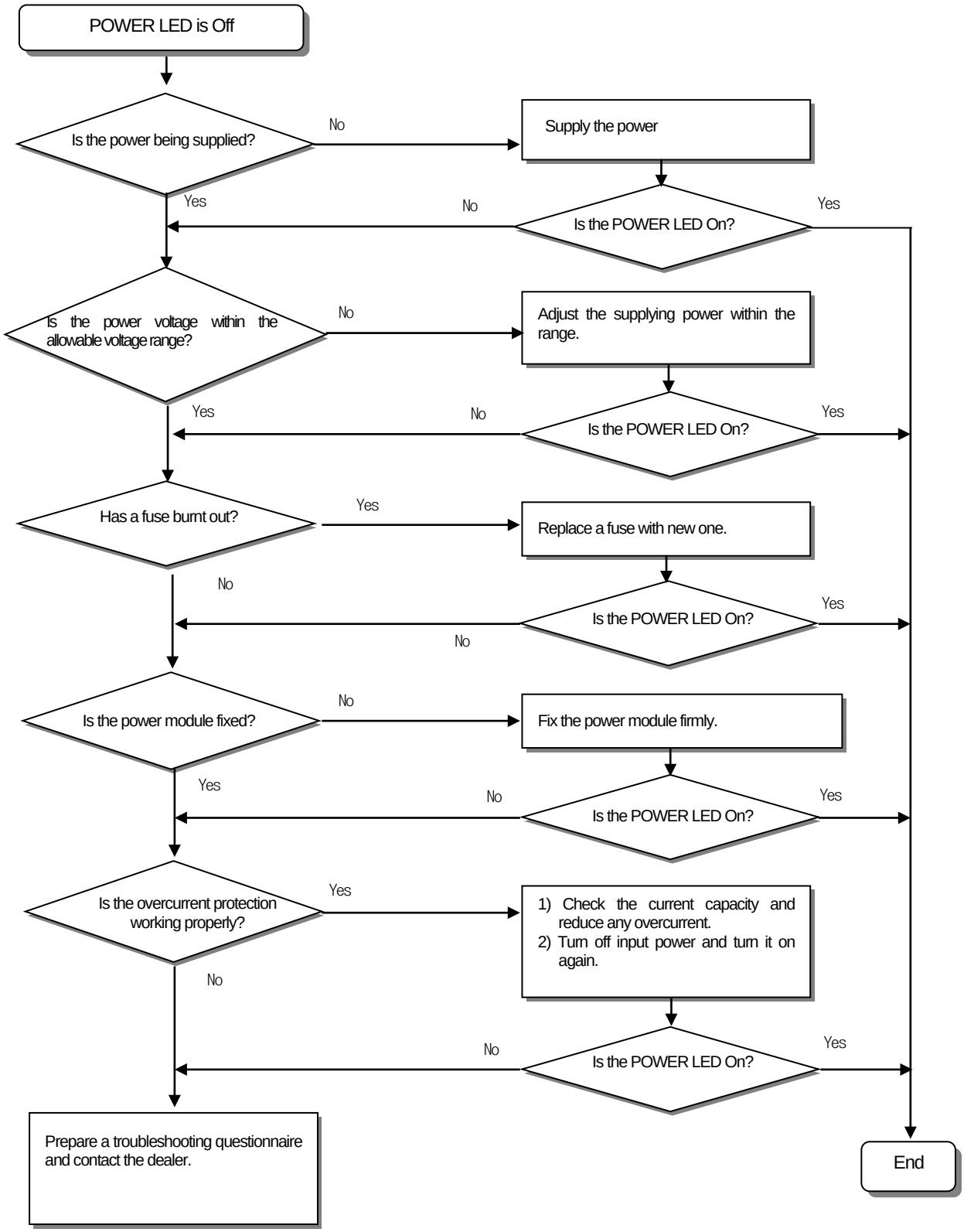

15.2.2 Action when WAR. (Warning) LED is on.

The paragraph describes the orders of taking a measure if WAR.. LED is On when turning it on, starting operation or operating.

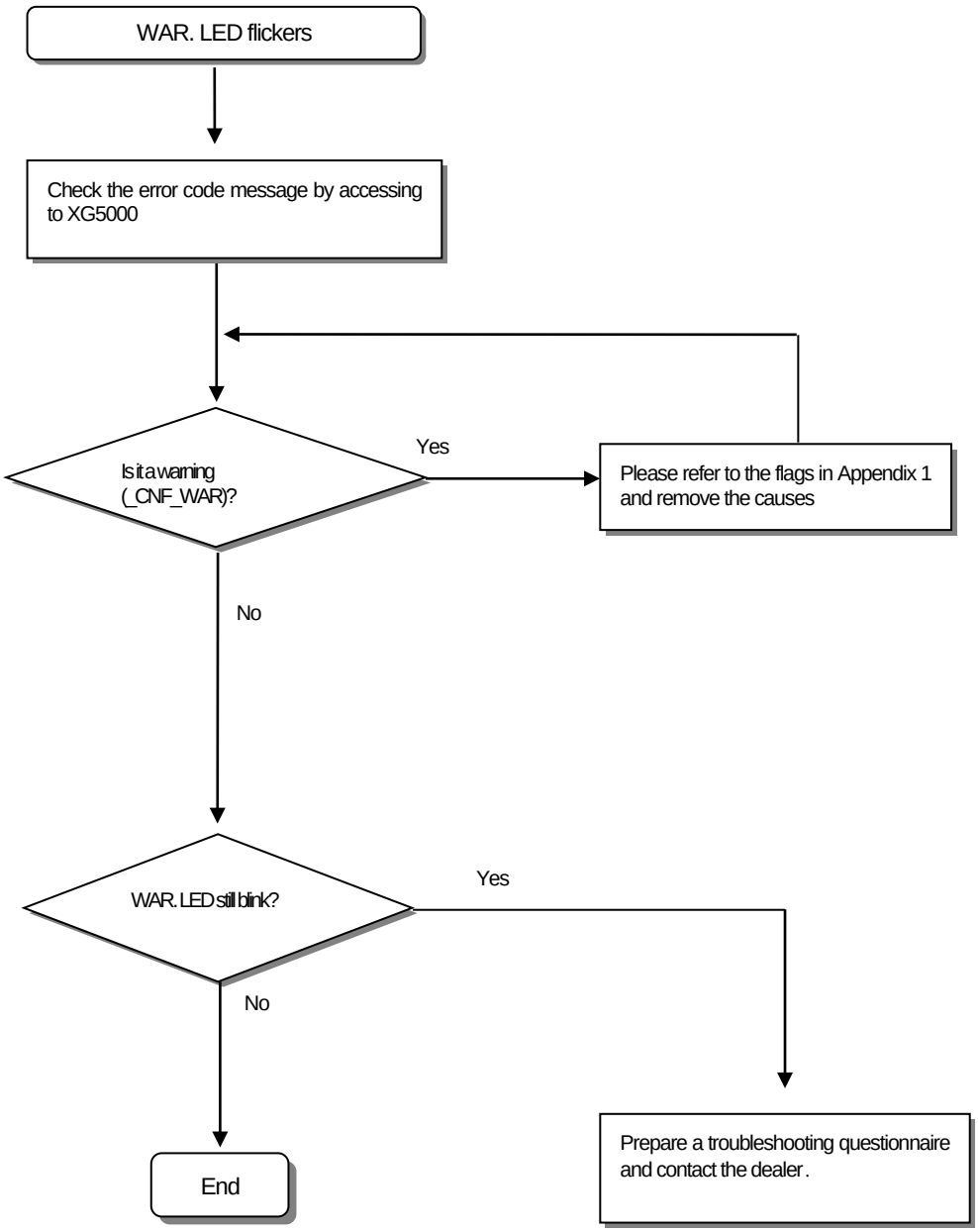

Caution

If warning error occurs, the PLC system does not stop but it is necessary to check the error message and take a corrective measure. Or it may cause an error.

It describes measure when WAR LED is on because redundant system runs in single or configured b Line mode. Connecti XG5000 and execitue [Monitor]-[System Monitor] and select [PLC]-[System Configuration] to check.

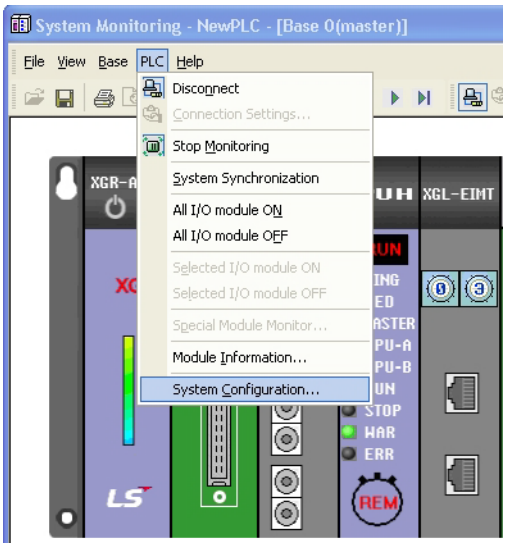

[Figure 15.2.1] System configuration menu

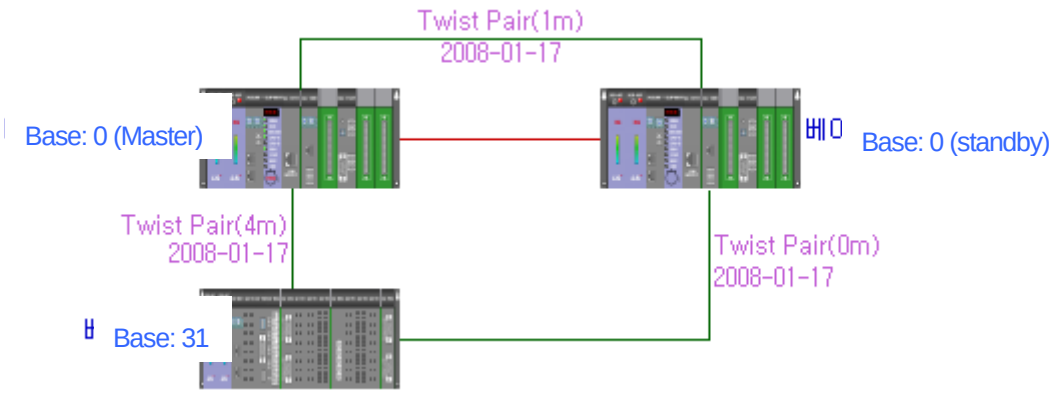

[Figure 15.2.2] system configuration (in case of Ring configuration)

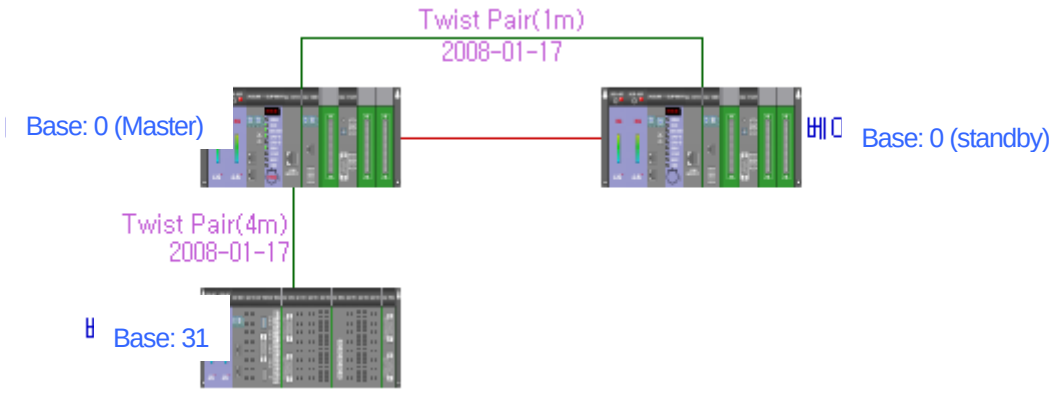

[Figure 15.2.3] System configuration (in case of line configuration)

In case system is configured as ring, basic base and expansion base is displayed by ring like [Figure 14.2.2].In case system is configured as line, disconnection between bases is displayed like [Figure 14.2.3]. This can be checked by LED. In case system starts with line topology, RING LED turns off. In case it starts with ring topology and it changes the topology to line,

RING LED flickers

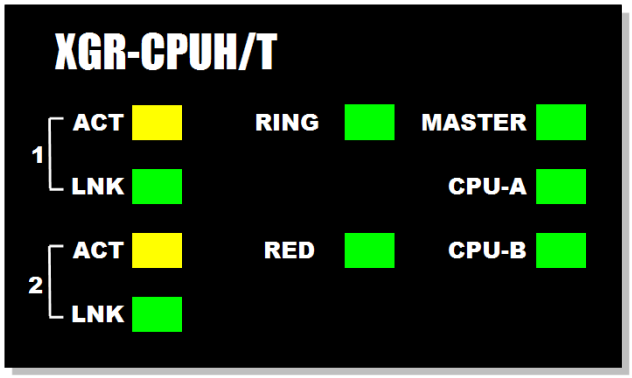

[Figure 15.2.4] CPU module LED

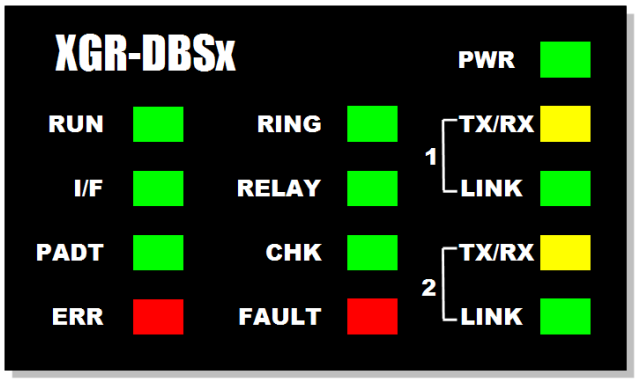

[Figure 15.2.5] Expansion drive LED

Caution

Since optical cable consists of two couples unlike electrical cable, TX and RX can be changed in case of installation.
Make sure that direction of TX and RX does not change. (TX should be connected with RX, and RX with TX.)

The paragraph describes the orders of taking a measure if RING LED is off or flickers when turning it on, starting operation or operating.

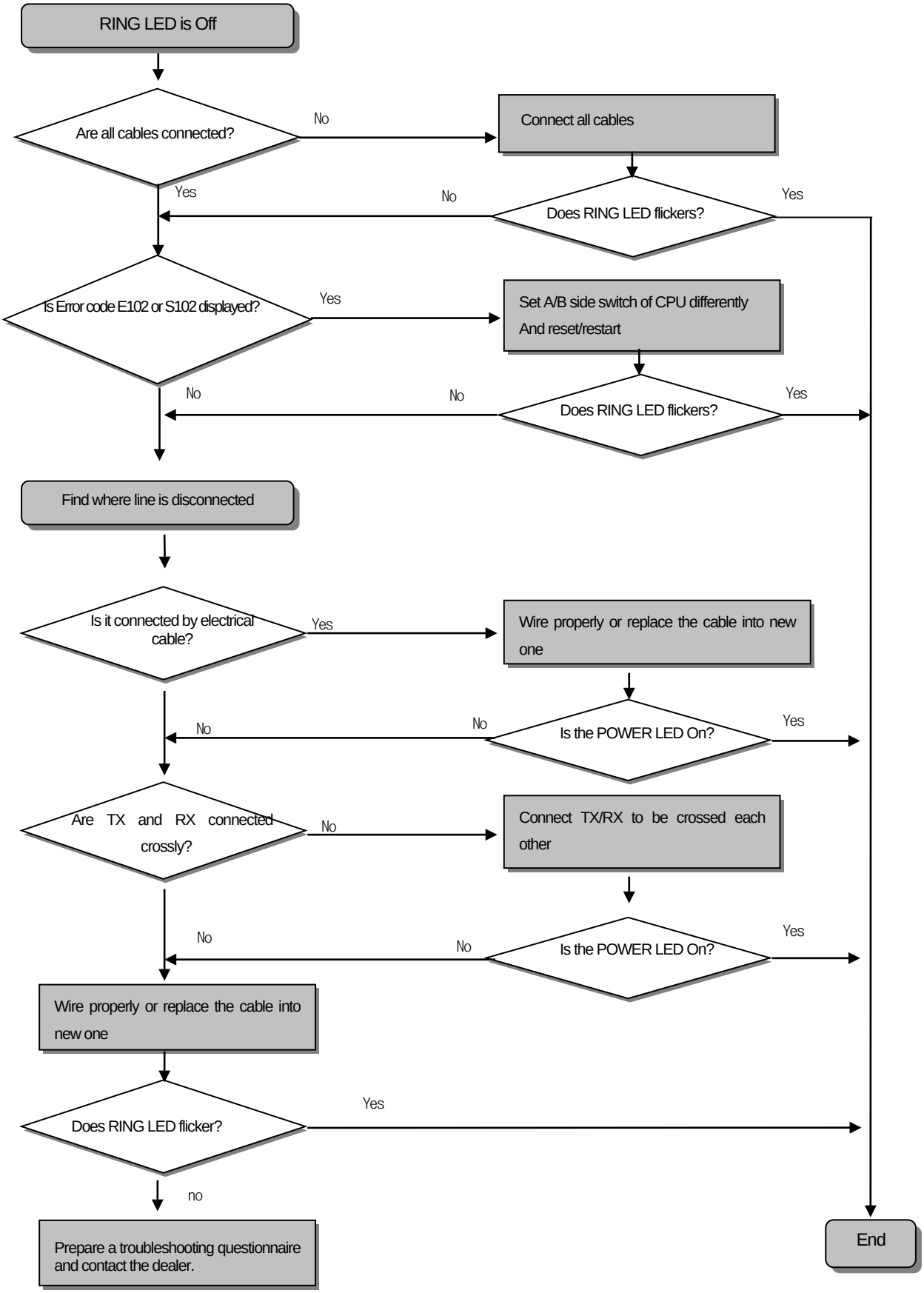

15.2.3 Action when ERR. LED is on

The paragraph describes the orders of taking a measure if ERR. LED flickers when turning PLC on or starting operation

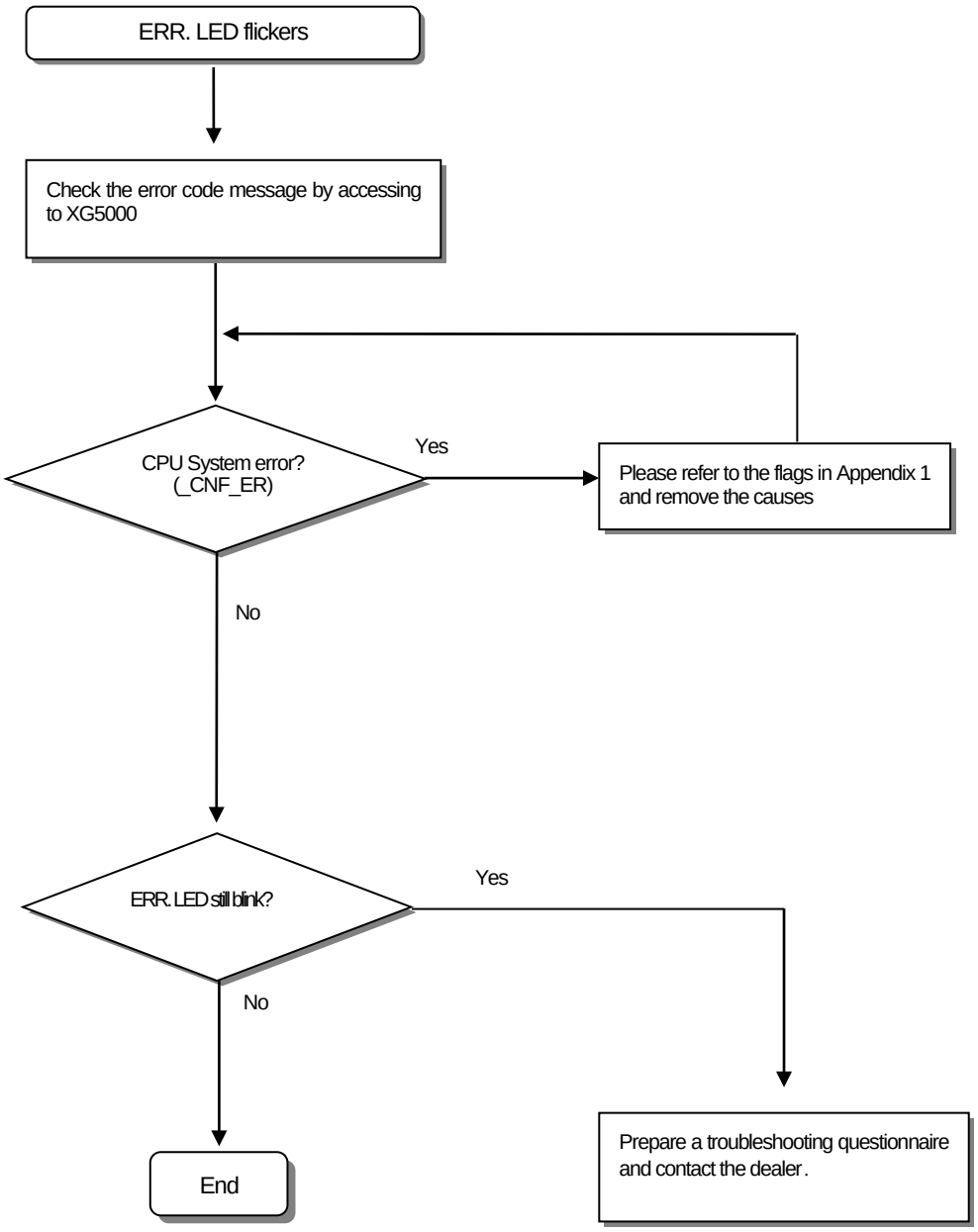

Caution

If warning error occurs, the PLC system does not stop but it is necessary to check the error message and take a corrective measure. Or it may cause an error.

15.2.4 Action when RUN/STOP LED is off

The paragraph describes the orders of taking a measure if RUN/STOP LED is Off when turning it on, starting operation or operating.

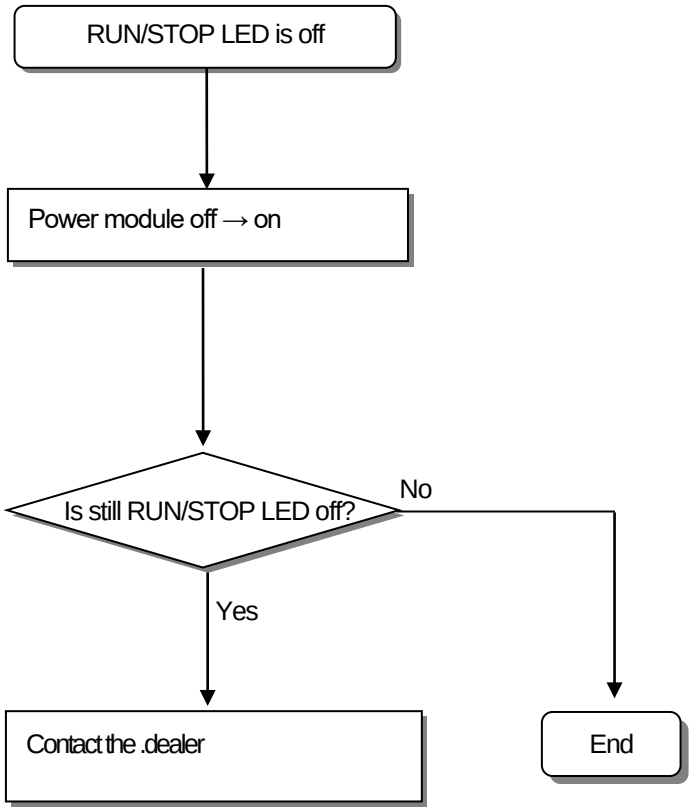

15.2.5 Acton when I/O module does not work properly

For the orders of taking measures when I/O module does not properly work during operation, the paragraph explains it with the following illustration.

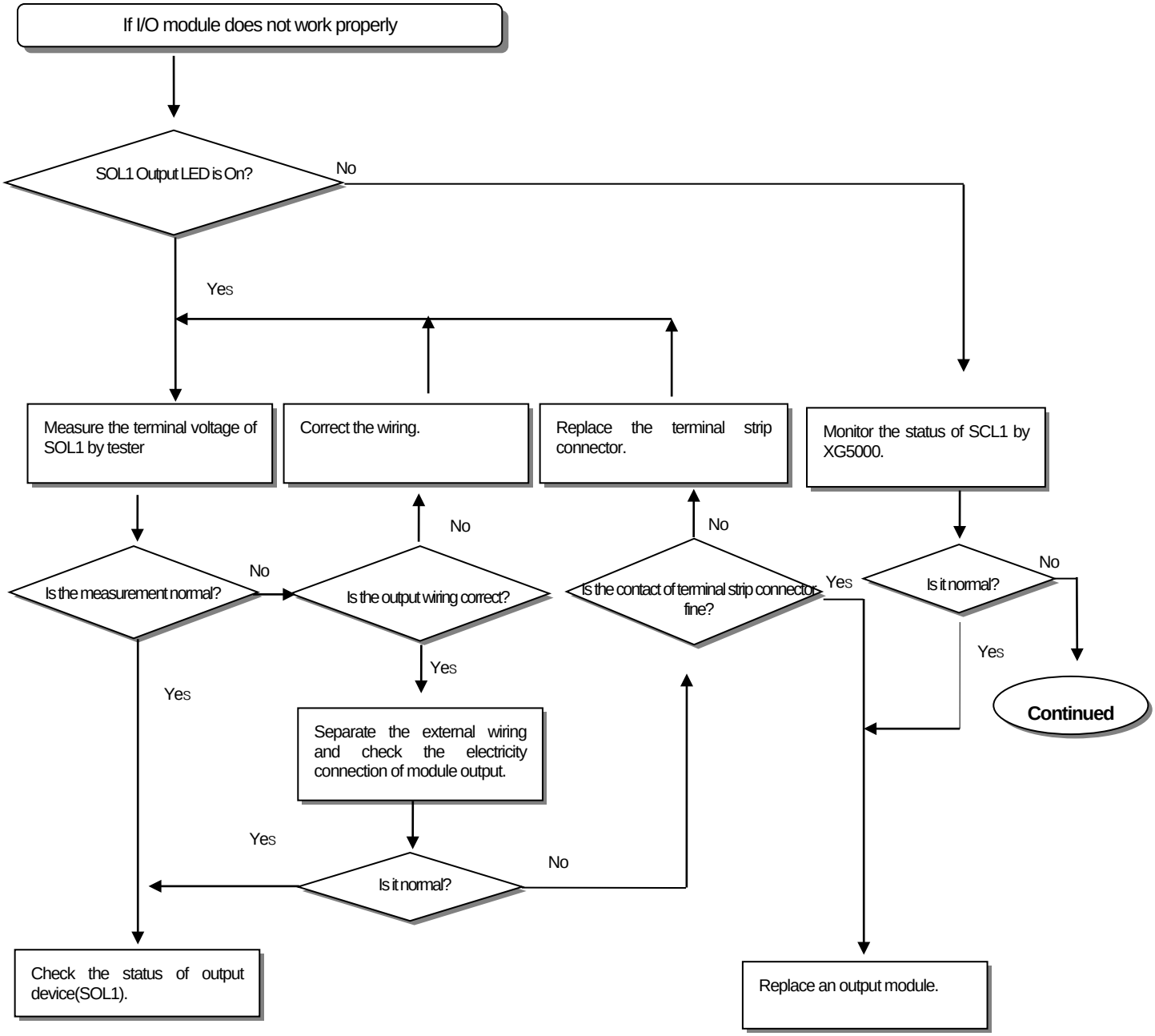

Continued

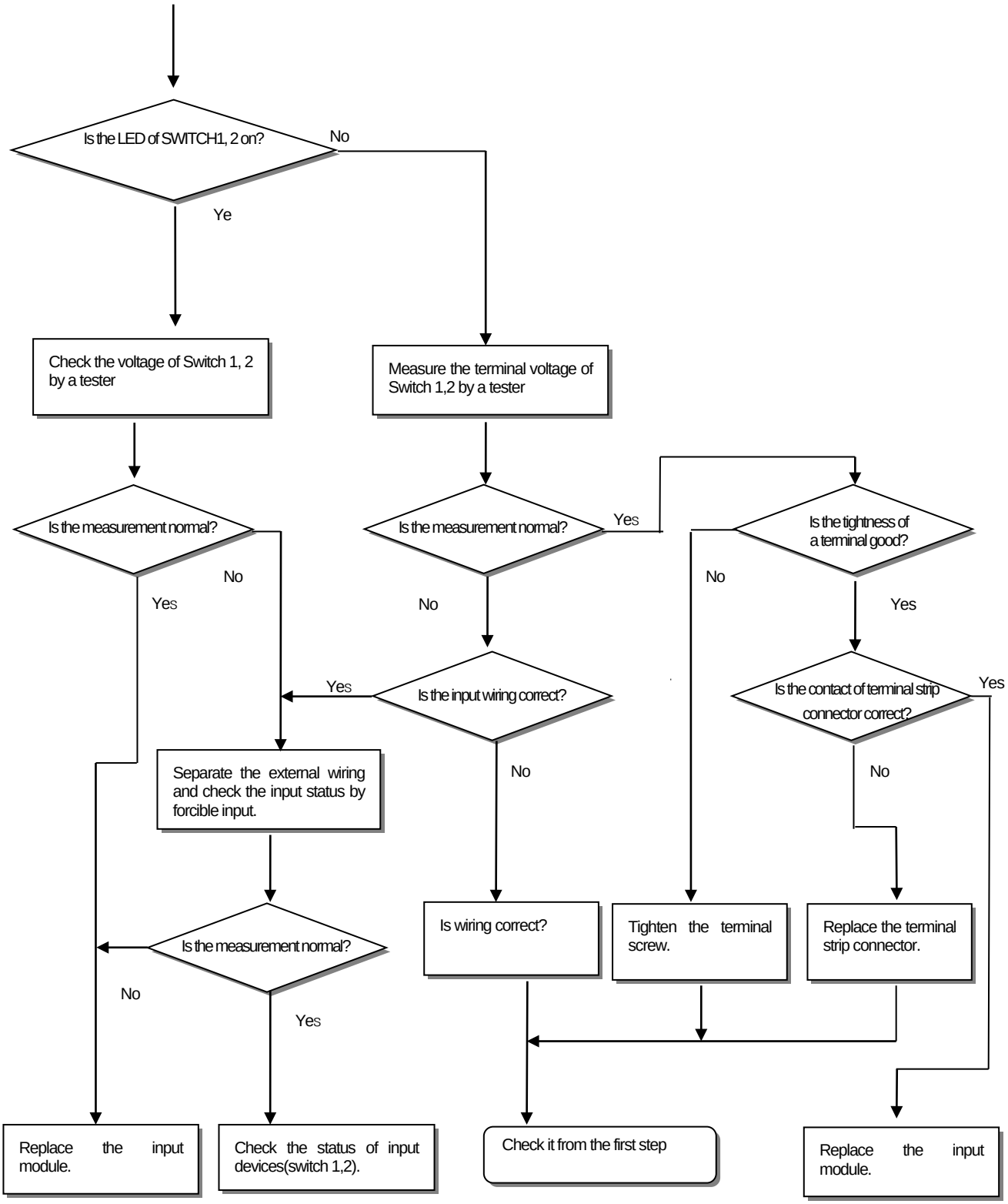
Is the LED of SWITCH1, 2 on?
No
Ye
Check the voltage of Switch 1, 2 by a tester
Measure the terminal voltage of Switch 1,2 by a tester
Is the measurement normal?
No
Yes
Is the measurement normal?
Yes
No
Is the tightness of a terminal good?
No
Yes
Yes
Is the input wiring correct?
Is the contact of terminal strip connector correct?
Yes
Separate the external wiring and check the input status by forcible input.
No
No
Is the measurement normal?
No
Yes
Is wiring correct?
Tighten the terminal screw.
Replace the terminal strip connector.
Replace the input module.
Check the status of input devices(switch 1,2).
Check it from the first step
Replace the input module.

15.2.6 Action when writing program is not possible

It describes the orders of taking a measure when writing a program into the CPU Module is not possible.

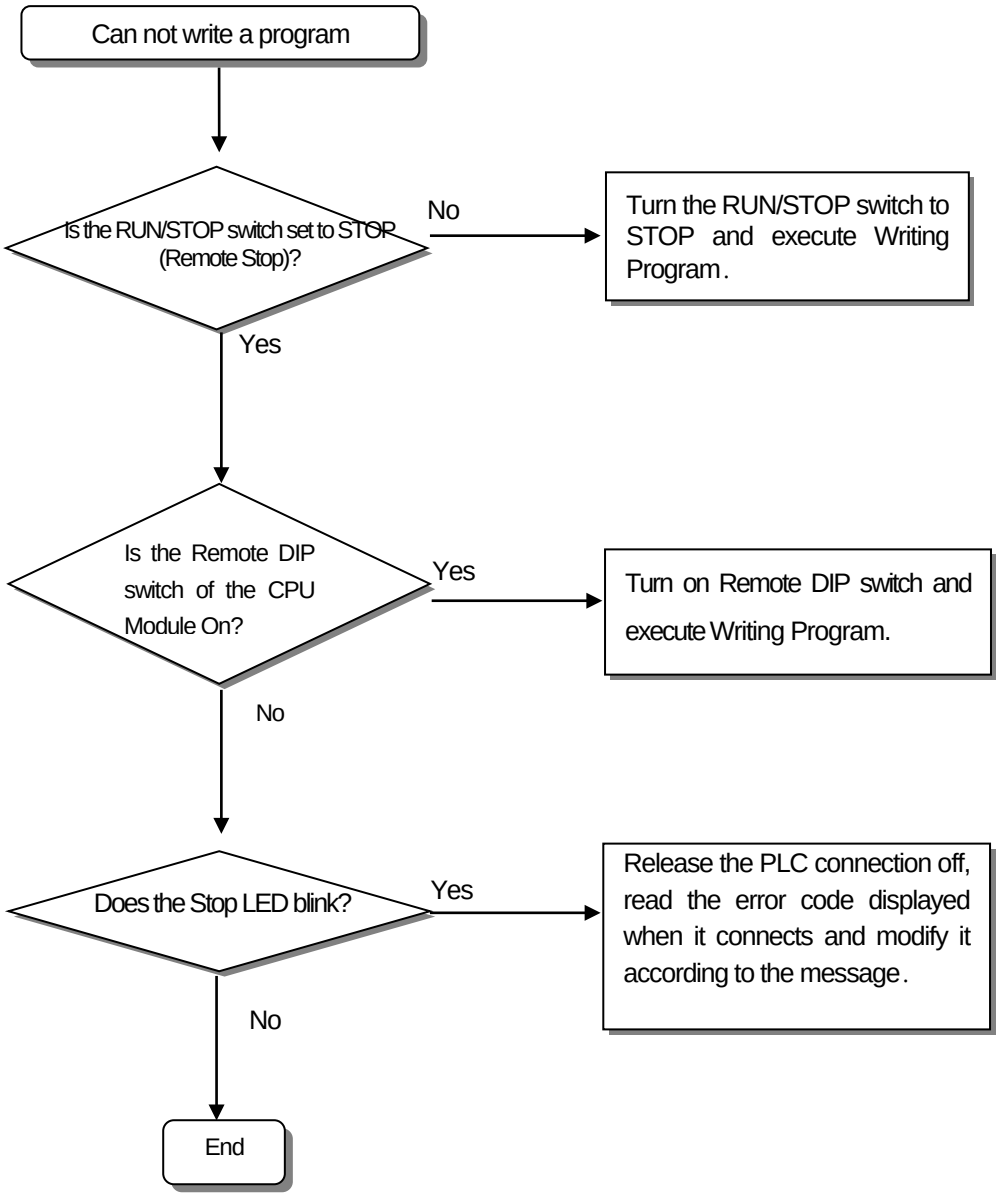

15.2.7 Action when Sync. cable is not installed properly

If there is a problem in Sync. Cable, redundant operation is not possible. It describes action when Sync. Cable is not installed properly.

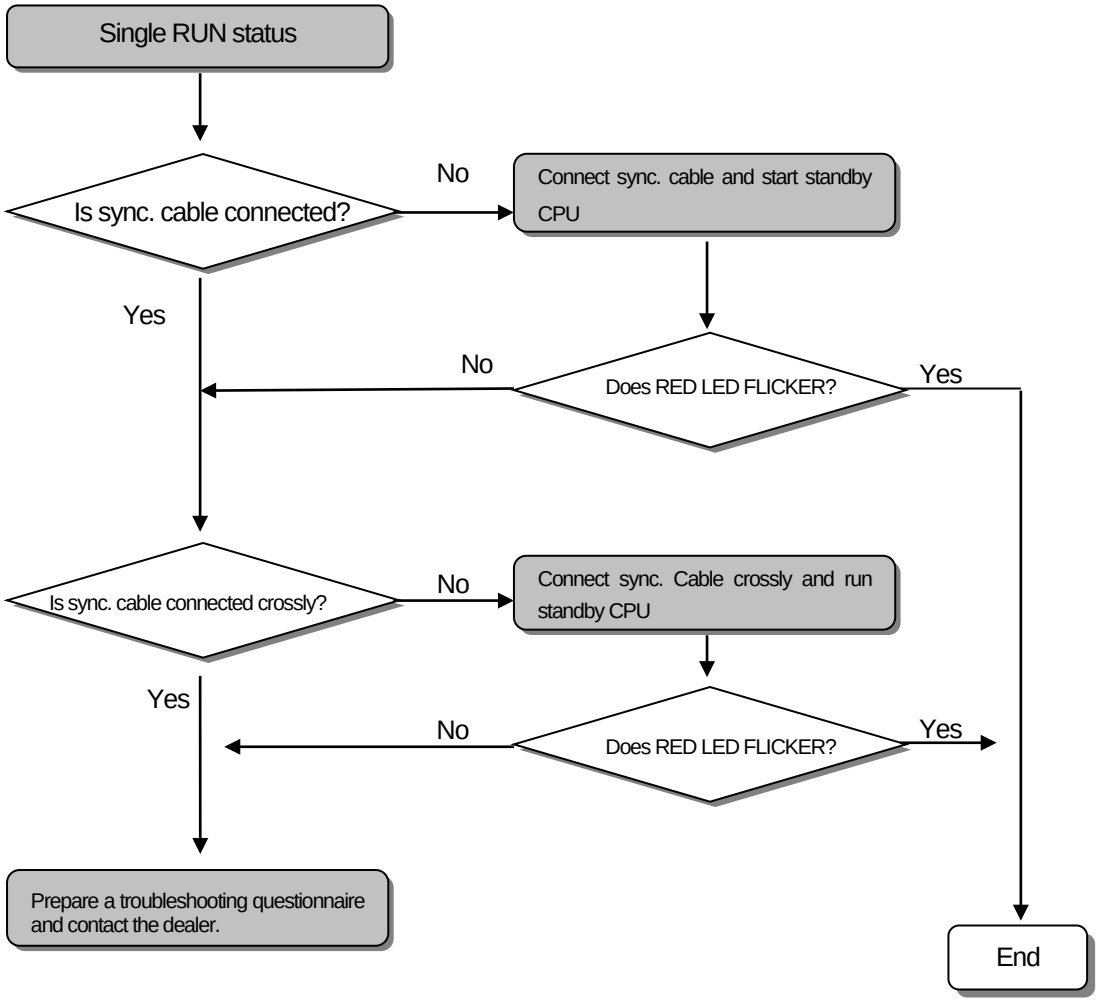

15.2.8 When undesirable master switching occurs

In case switching occurs, it is displayed by MASTER LED at front part. If the revelent is acting as master, MASTER LED is on and if it is acting as standby CPU, MASTER LED off. It swtiching the user does not want occurs, see the following steps.

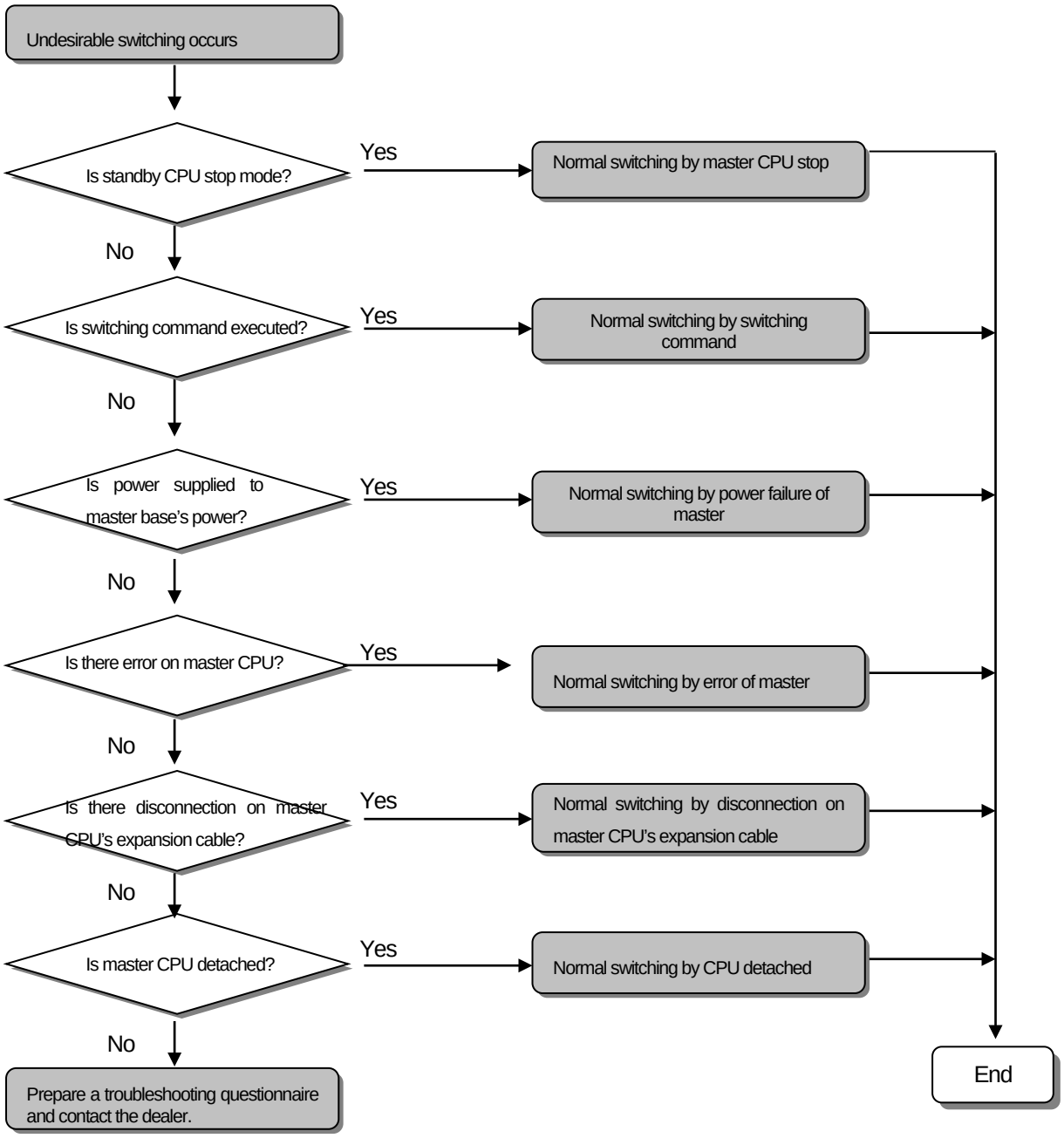

15.2.9 When newly added CPU does not join redundant operation

In case of adding new CPU to the previous system, it should act as standby CPU if normal.Before starting, check the Sync. Cable and expansion cable. To join reduntdunt operation, version of new CPU should be same with previous CPU. If not, error occurs because of version. Contact near dealer and get update of new OS.
If you have a problem when adding new CPU, see the following steps.

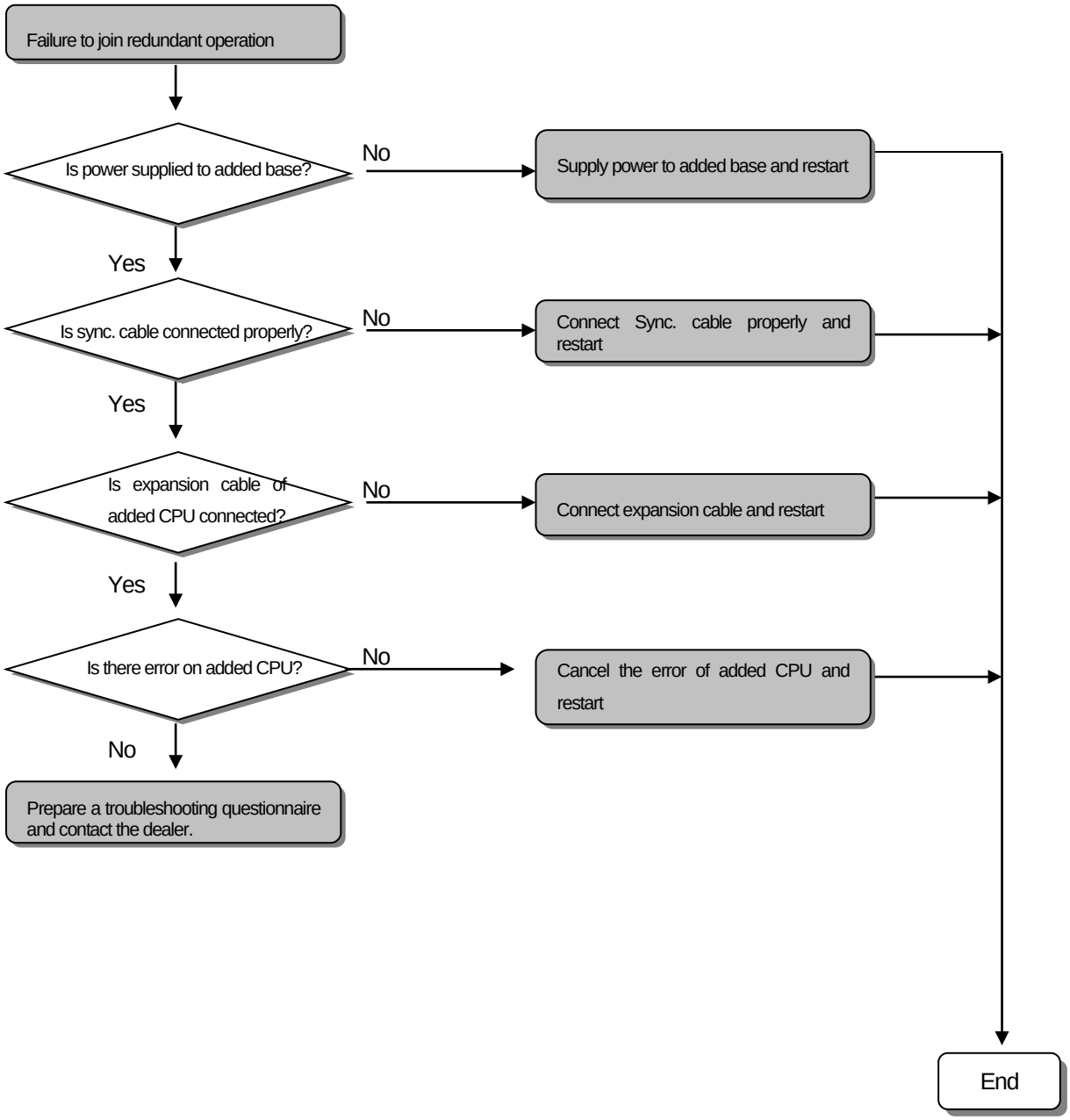

15.2.10 When failing to switch master

If system is not redundancy status, switching may fail. Before switching, check the redundant ring configuration, RUN status of master/standby CPU, connection status of Sync. Cable.
In case you try to switch but fail, see the following steps.

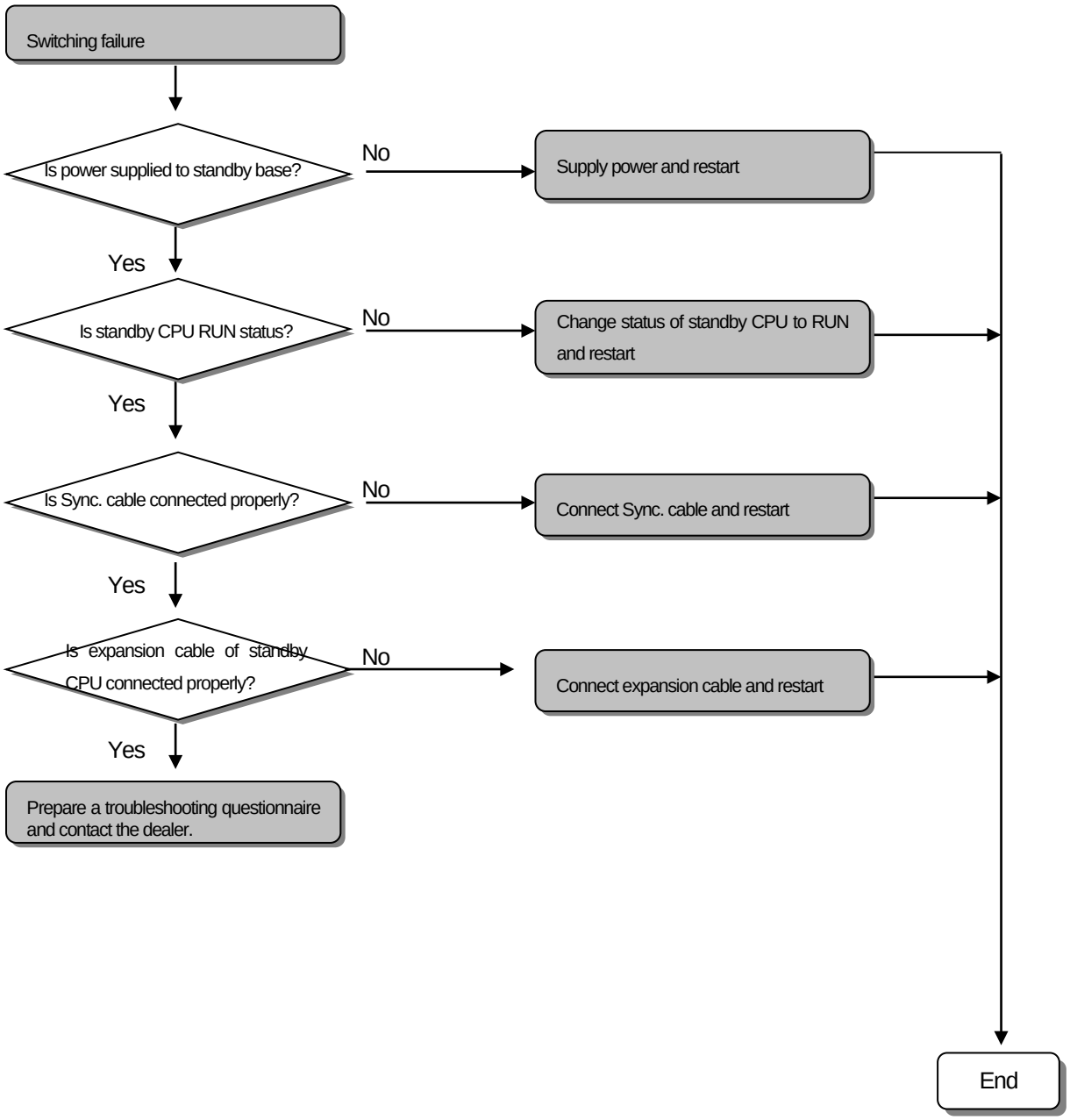

15.2.11 When expansion cable is disconnected

In case two expansion cables are disconnected, cable disconnection error occurs or system except disconnected expansion base operates normally.

- Cable disconnection error(E036) : In case fault mask is not set→

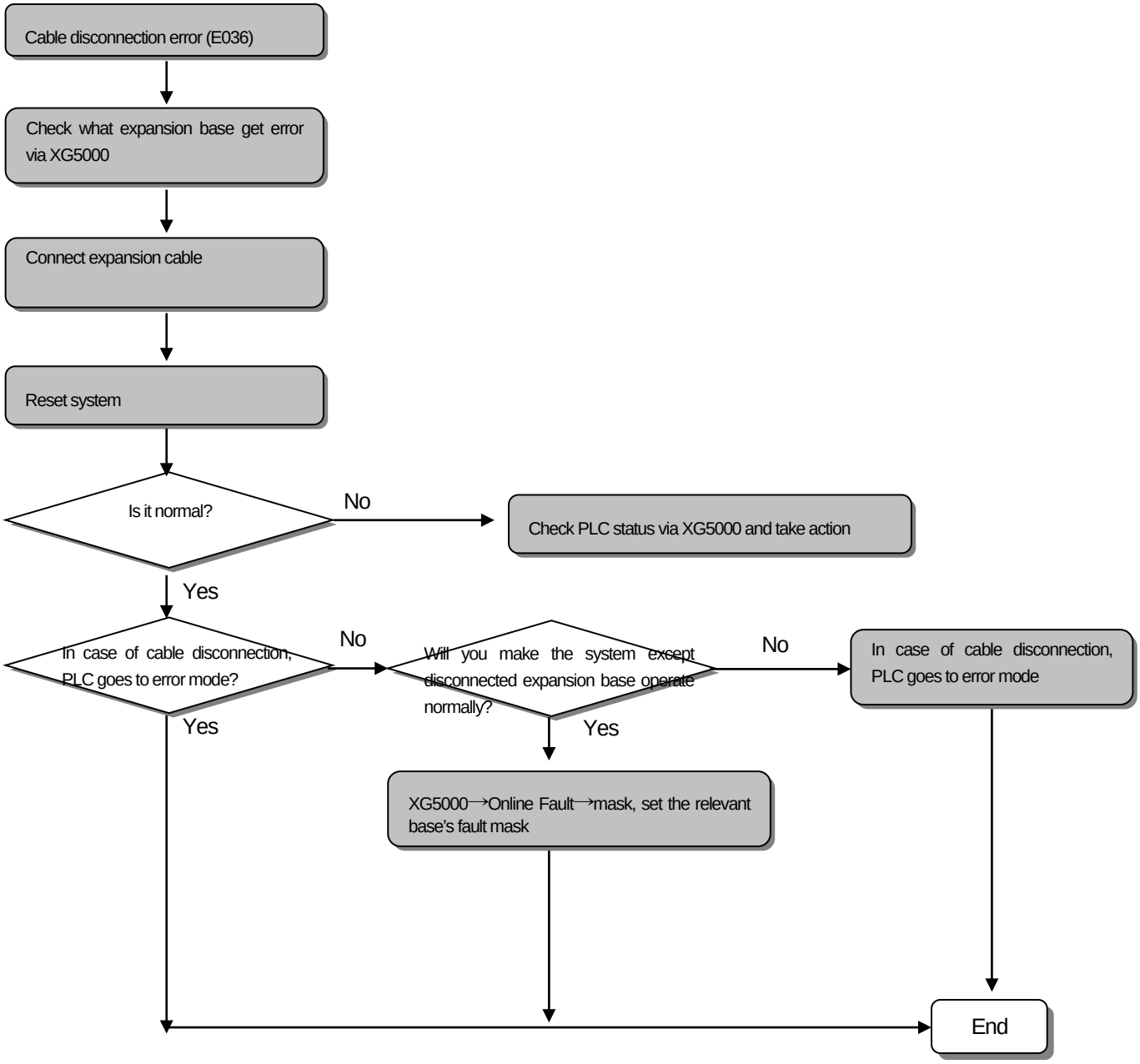

(2) system except disconnected expansion base operates normally: in case fault mask is set

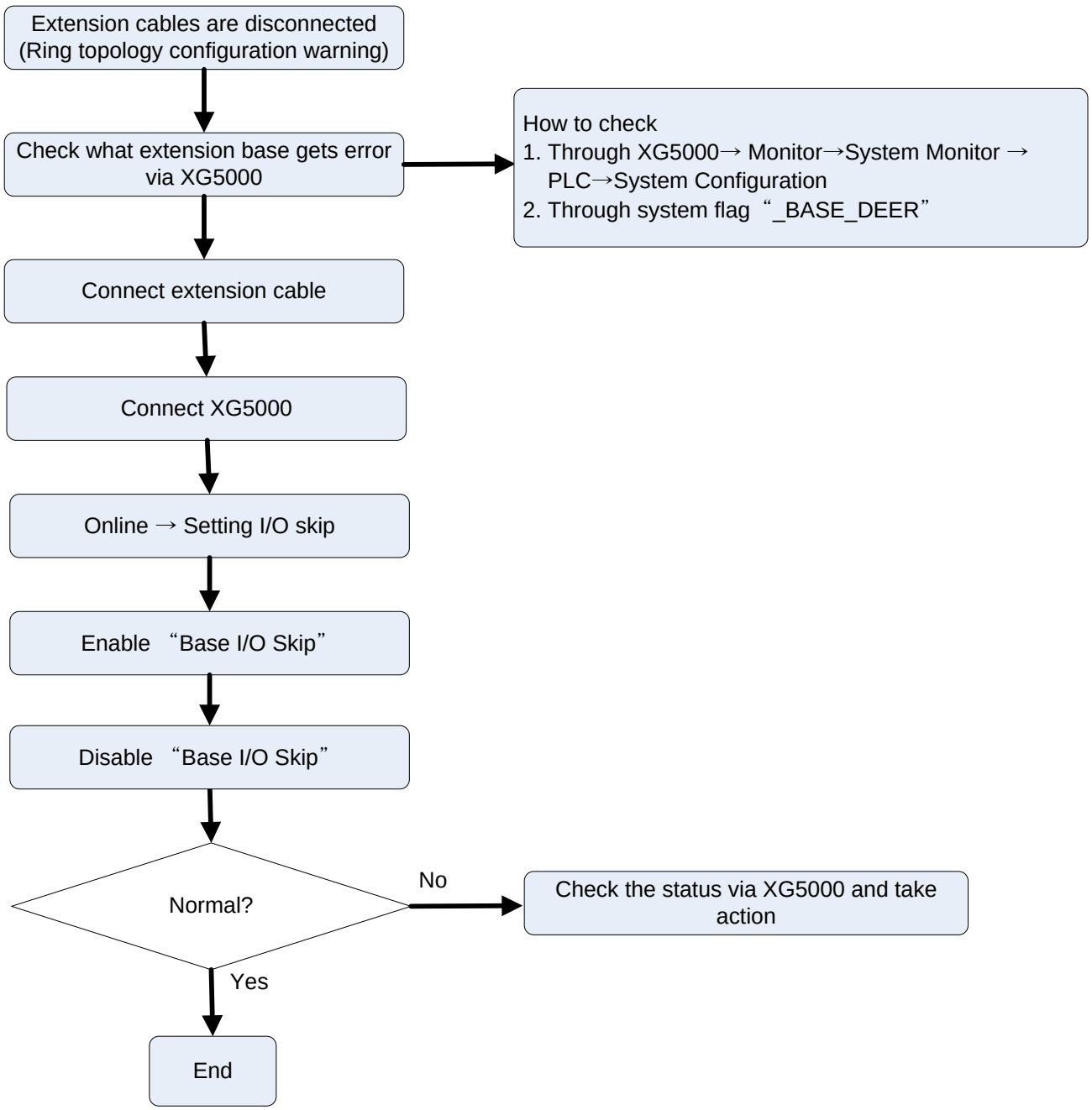

15.2.12 When expansion driver gets error

In case expansion driver is detached (or get error), cable disconnection error occurs or system except disconnected expansion base operates normally.

(1) Expansion base detach error (E036) : In case fault mask is not set

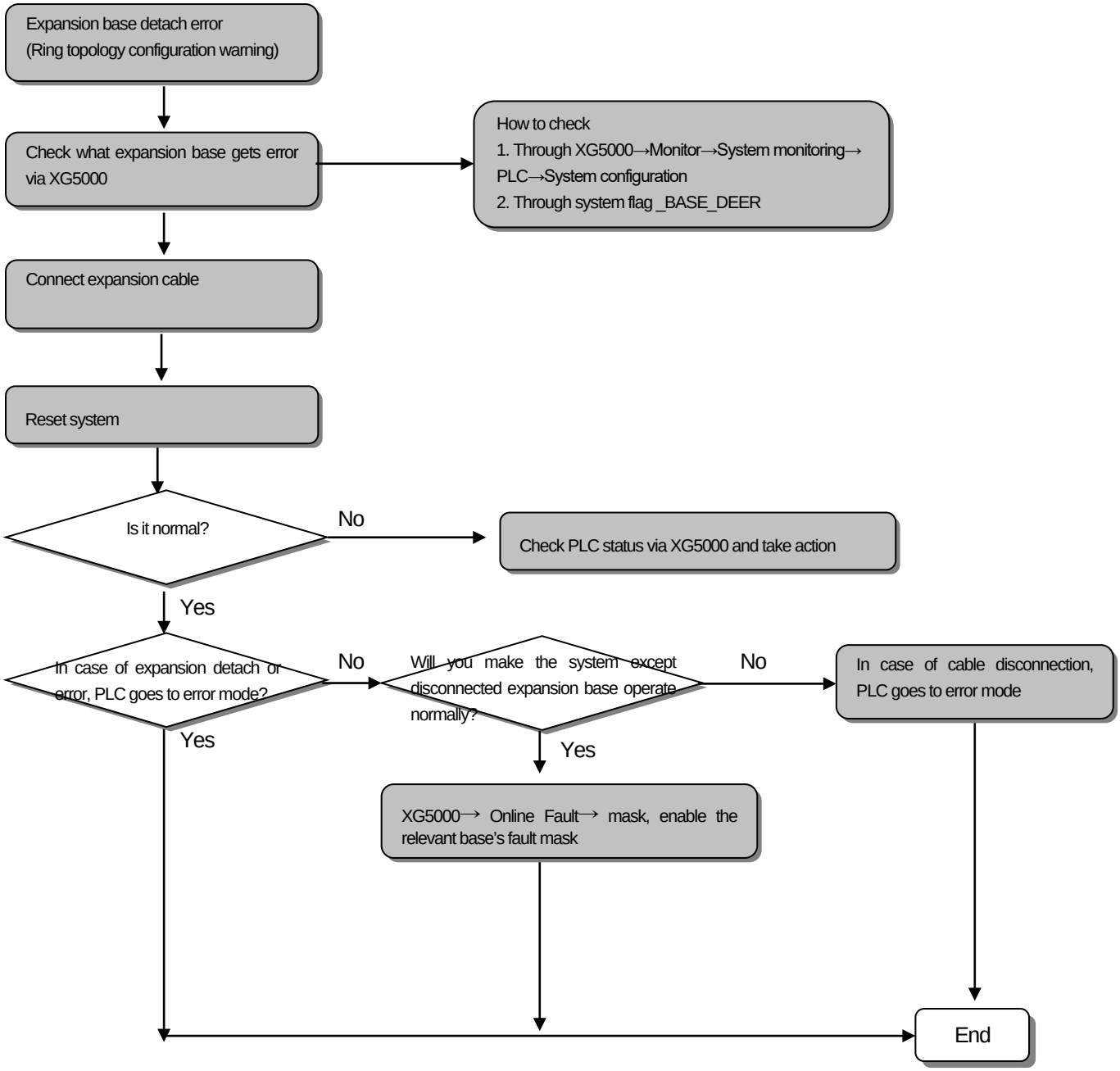

(2) system except detached expansion base operates normally: in case of enabling fault mask

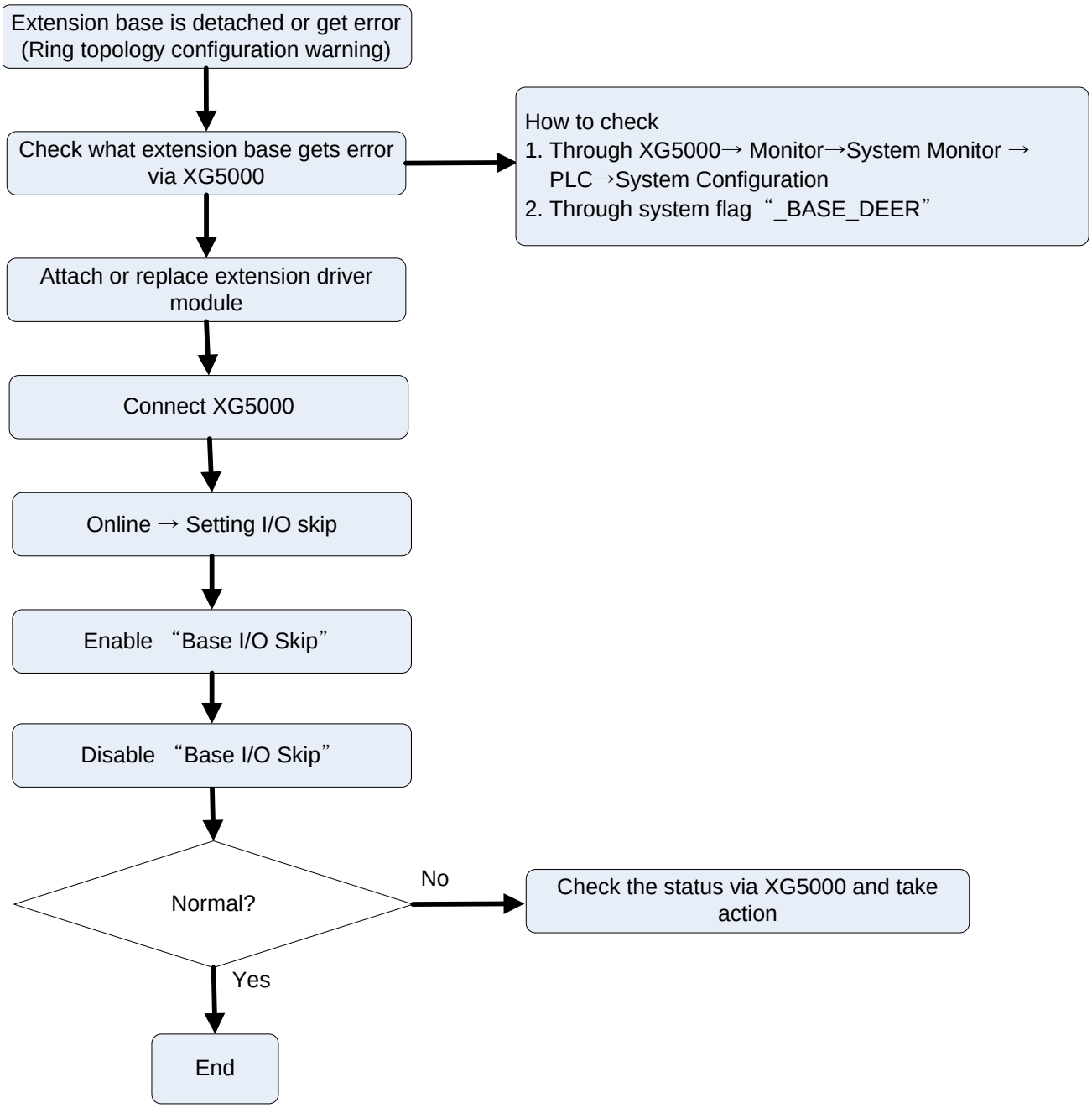

15.3 Troubleshooting Questionnaires

If any trouble is found while using the XGI series, please fill out the form and call to fax it to us.

• For an error relating to special/communication modules, fill out the questionnaires attached in the user's manual of the product.

1. Customer's Contact Number: TEL) _____
   FAX) _____
2. Model : ( )
3. Details of the Product
   – Details of the CPU module : – OS version ( ), – Product's serial number ( )
   – XG5000 Version number used for program compiling : ( )
4. Brief description of a device and system :
5. Modules using the CPU module :
   – Operation by key switch ( ), – Operation by XG5000 or Communication ( )
   – Memory module operation ( )
6. STOP LED On of the CPU module? Yes( ), No( )
7. Error message generated from the XG5000 :
8. Measures taken against the error code in the above 7 :
9. Other troubleshooting measures against the error :
10. Features of the error
    • Reiterative( ) : Periodic( ), Relating to a specific sequence level( )
      Relating to the environment( )
    • Intermittent( ) : Approx. interval of the error occurrence :
11. Detail description for the erroneous phenomena :
12. Configuration of the applied system :

15.4 Cases

It describes trouble types and measures for circuits.

15.4.1 Trouble types and measures of input circuit

The followings describe the examples and measures of troubles.

Phenomena	Causes	Measures
Input signal can not be off	Leakage current of an external device (if operating by proximate switch and others) 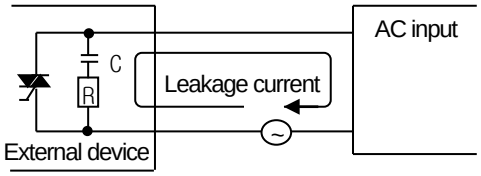 	• Connect a proper resistance or capacitor so that the voltage between terminals of input module is below the return voltage. 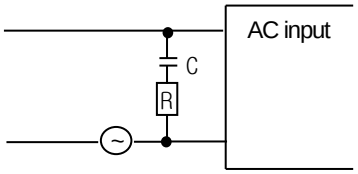 • CR value is determined by the value of leakage current. – Recommended value C : 0.1 ~ 0.47uF R : 47 ~ 120 Ω (1/2W) Or, separate a circuit completely and install another display circuit.
Input signal can not be off(neon lamp could be still on)	Leakage current of an external device(operation by a limit switch with neon lamp) 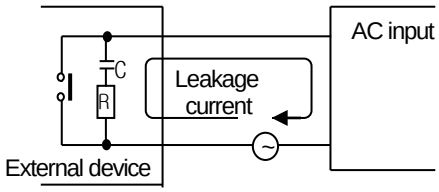 	
Input signal can not be off	leakage current from the capacity between wires of wiring cable 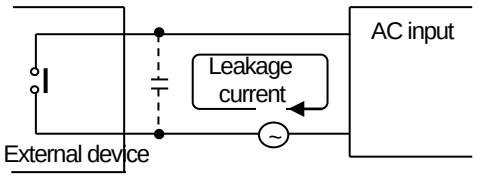 	• Install the power on an external device as presented below. 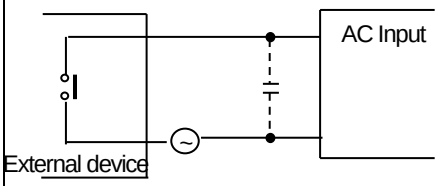
Input signal can not be off	Leakage current of an external device(operation by a switch with LED mark) 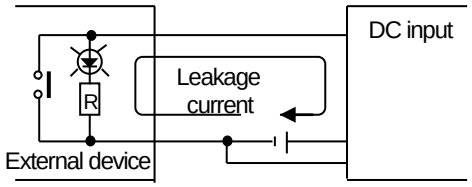 	• Connect a proper resistance so that the voltage between input module terminal and common terminal is higher than off voltage as presented below. 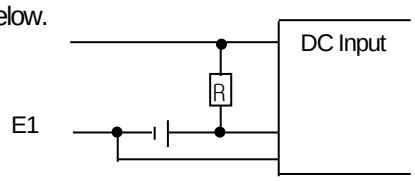
Input signal can not be off	• Circulating current by using plural different power sources 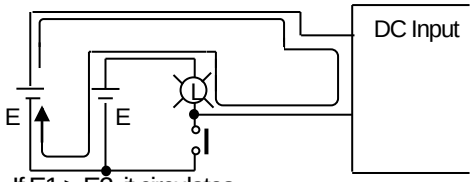 • If E1 > E2, it circulates.	• Change plural to singular power • Connecting to a circulating current preventive diode(figure below) 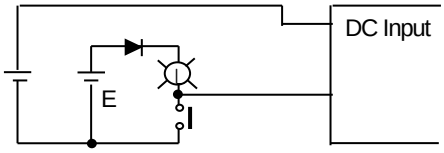

15.4.2 Trouble types and measures of output circuit

The followings describe the examples and measures of troubles.

Phenomena	Causes	Measures
Excessive voltage is allowed to load when output contact is off	• If load contains half-wave rectification(solenoid valve may have it) • If the polarity is ←, C is charged while the voltage + power voltage charged to C is allowed to both ends of diode(D). when the polarity is ↑. The max. voltage is approx. $2\sqrt{2}$. 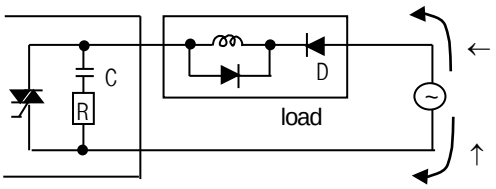 Note) when using it as the above, the output element does not have any problem but the performance of diode(D) in load may be reduced, probably causing a trouble.	• Connect a dozens ~ several hundreds kΩ resistor to a load in parallel. 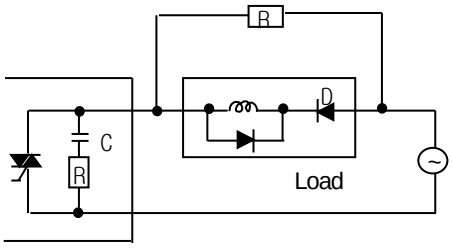
Load can not be off	• Leakage current from surge absorbing circuit connected to an output element in parallel 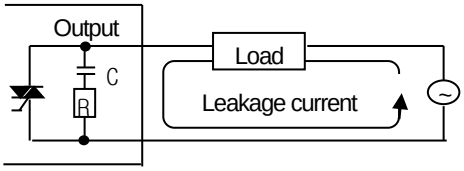 	• Connect a dozens of kΩ resistor or CR of which impedance is equal to the resistance to load in parallel. Note) If the length of wiring from output module to load is long, it may have leakage current from capacity of cables. 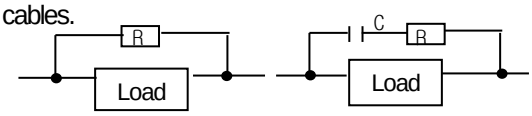
Abnormal time when load is a C-R type timer	• Leakage current from surge absorbing circuit connected to an output element in parallel. 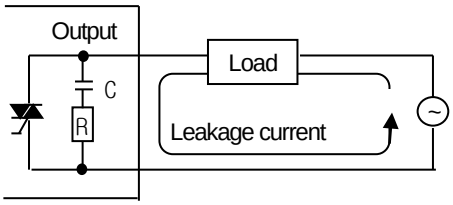 	• Operate the C-R type timer by mediating a relay. • Use other one but a C–R type timer. Note) A timer's internal circuit may have half-wave rectification 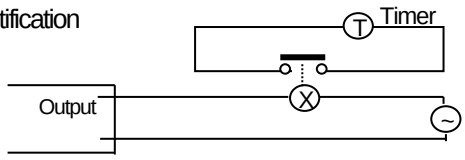

Load can not be off(DC)	• Circulating current resulting from two different power source 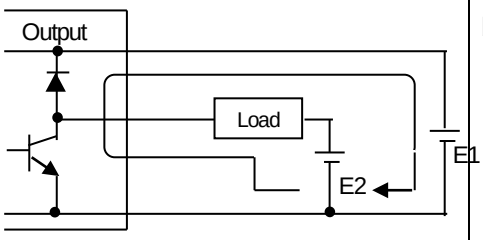 • It circulates if E1< E2. • It also circulates even when E1 is Off(E2 is On).	• Adjusting plural to singular power source. • Connecting to circulating current preventive diode(figure below) 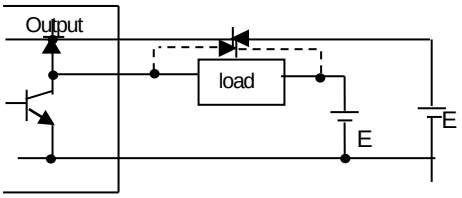 Note) If load is relay and others, it needs connecting a counter voltage absorbing diode as a dotted line in the figure.

Phenomena	Causes	Measures
Off response from load takes a longer time.	• Overcurrent at Off If a large current load such as solenoid(time constant L/R is large) is directly operated by transistor output. 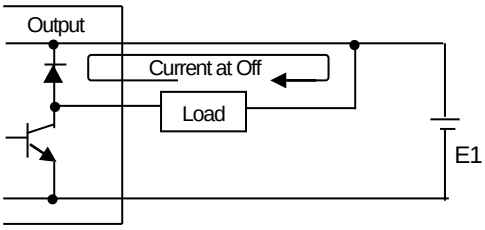 • Since current is allowed through diode when transistor output is off, it may be delayed for 1 second and longer depending on load.	• Insert a magnetic connector and others of which time constant is small as presented in the figure and operate load by the contact 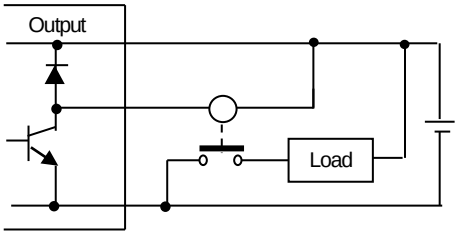
Output transistor is destructed.	Inrush current of glow lamp 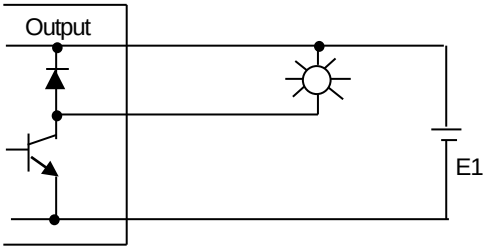 As soon as it lights up, it may have 10 times and higher inrush current.	• To restrict inrush current, it should allow dark current that is 1/3 ~ 1/5 of the rated current of glow lamp. 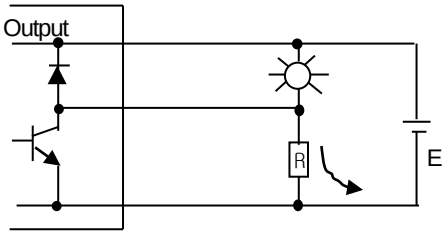 Sink type transistor output 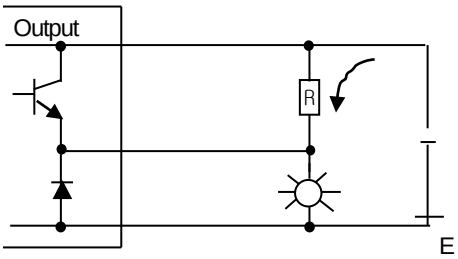 source type transistor output

15.5 Error Codes List

15.5.1 Error codes during CPU operation

Code	Error causes	Measures	Operation status	LED status	Diagnostic timing
13	Abnormal base information	Contact A/S service if it still exists after turning it on again	STOP	S013	Turning it on Converting to RUN mode
23	If a program to execute is not normal	Operate after downloading program again (Cold) Replace a battery in case of abnormal battery (Cold) After a program is reloaded, check the storage condition and if any fault is found, replace the CPU module. (Cold)	STOP	E023	Converting to RUN mode
24	Abnormal I/O parameter	Check I/O parameter and the installed module Set I/O parameter to be same with installed module and download	STOP	E024	Converting to RUN mode
25	Abnormal basic parameter	Restart after basic parameter is reloaded Replace a battery in case of defective battery After basic parameter is reloaded, check the storage condition and if any fault is found, replace the CPU module.	STOP	E025	Converting to RUN mode
28	Abnormal Redundancy parameter	Start after loading redundancy parameter again (Doesn't check in case of downloading during Run)	STOP	E028	Turning it on, Loading program
29	Abnormal special parameter	Start after loading special parameter again (Doesn't check in case of downloading during Run)	STOP	E029	Turning it on, Loading program
30	The module set in parameter and the actually installed module do not coincide	Check the wrong slot position by XG5000, modify a module or parameter and then, restart. Reference flag: module type inconsistence error flag (_IO_TYER, _IO_TYER_N, _IO_TYERR[n])	STOP, RUN	E030	Turning it on, Loading program Converting to RUN mode
31	Module detachment or module addition during operation	Check any detached/added slot position by XG5000, modify the installment and restart (according to parameter) Reference flag: module detachment error flag (_IO_DEER,_IO_DEER_N,_IO_DEERR[n])	STOP, RUN	E031	scan ends
32	Fuse of a module holding a fuse is burnt out during operation	Check the position of a slot of which fuse is burnt out by XG5000, replace a fuse and restart (according to parameter) Reference flag: fuse disconnection error flag (_FUSE_ER,_FUSE_ER_N,_FUSE_ERR[n])	STOP, RUN	E032	scan ends

Code	Error causes	Measures(restart mode after the measure)	Operation status	LED status	Diagnostic timing
36	Expansion base detach error	Check the detachment of expansion base	STOP, RUN	E036	turning it on, Scan end, Executing program
39	CPU abnormal end or trouble	Contact A/S service if it still exists after turning it on again	-	E039	turning it on, Scan end, Executing program
40	The scan time of a program exceeds the scan delay watchdog time designated by parameter during operation	Check the scan delay watchdog time designated by parameter, modify parameter or program and restart (cold)	STOP	E040	Executing program
41	Program execution code error	Download program again and restart	STOP	E041	turning it on,
43	Duplicated base number	Check the duplicated base number	STOP	E043	Executing program
45	Base power error	Two power module are off Check attachment of power module	STOP RUN	E045	turning it on,
48	Module position error	Module that can't be installed has bee installed For more detail, refer to error history	STOP RUN	E048	turning it on, Loading program Switching to RUN mode
50	Error of external device is detected by a user program during operation	Repair a fault device by referring to error detection flag of external device and restart(according to parameter) (_ANNUN_ER,_ANC_ERR[n])	STOP RUN	E050	When scan ends
101	CPU position error	CPU is installed at wrong position Position CPU correctly	STOP	S101	turning it on,
102	Duplicated CPU ID error	Set the A/B side switches of Master CPU and Standby CPU differently	STOP	S102	turning it on,
103	Base abnormal error	Configure expansion cable as Ring Topology and position detached base correctly. For information of detached base, refer to CPU error log	STOP, RUN	E103	Executing program
104	System configuration error	- Check redundancy configuration ● Check redundancy drive module station no. ● Check O/S version of extension drive module and extension manager	STOP	E104	turning it on, Scan end
300	Redundancy system synchronous operating error	During redundancy operating, synchronization error occurs	STOP	E300	Switching to redundancy operation, operating

Code	Error causes	Measures(restart mode after the measure)	Operation status	LED status	Diagnostic timing
301	Standby CPU failed to operate as redundancy because of error of Master CPU	Restart as redundancy operation • set operation mode of standby CPU as STOP • Cancel the error of master CPU and restart • Change standby CPU into RUN Restart standby CPU as single operation • Disable master CPU (STOP mode or power cut) • restart standby CPU through reset switch or changing operation mode from STOP to RUN	STOP	E301	Starting standby operation
501	RTC data error	If there is no error in battery, reset RTC data via XG5000	RUN	E501	turning it on, scan end
502	Low battery voltage	Replace battery while power in on	RUN	E502	turning it on, scan end
bxx	Expansion base error	Check the power of expansion base Check the expansion cable	RUN	Ebxx	Operating

Note

(1) Error No. 2 through 13 from “Error Codes during CPU Operation” can be checked in our A/S Service Center.

(2) The other errors of which number is 22 and lower can be checked by using the error log of XG5000.

Appendix 1 Flag list

Appendix 1.1 User Flag

1. User flag

Address	Flag name	Type	Writable	Contents	Description
%FX6144	_T20MS	BOOL	-	20ms cycle clock	Clock signal used in user program reverses On/Off per a half cycle Please use more enough long clock signal than PLC scan time. Clock signal starts from Off condition when initialization program starts or scan program starts. _T100ms clock example 50ms 50ms 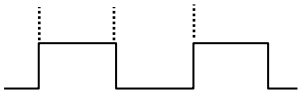
%FX6145	_T100MS	BOOL	-	100ms cycle clock	
%FX6146	_T200MS	BOOL	-	200ms cycle clock	
%FX6147	_T1S	BOOL	-	1s cycle clock	
%FX6148	_T2S	BOOL	-	2s cycle clock	
%FX6149	_T10S	BOOL	-	10s cycle clock	
%FX6150	_T20S	BOOL	-	20s cycle clock	
%FX6151	_T60S	BOOL	-	60s cycle clock	
%FX6153	_ON	BOOL	-	Ordinary time On	Always On state flag, used when writing user program.
%FX6154	_OFF	BOOL	-	Ordinary time Off	Always Off state flag, used when writing user program.
%FX6155	_1ON	BOOL	-	1'st scan On	Only 1'st scan On after operation start
%FX6156	_1OFF	BOOL	-	1'st scan Off	Only 1'st scan Off after operation start
%FX6157	_STOG	BOOL	-	Reversal every scan (scan toggle)	On/Off reversed flag per every scan when user program is working. (On state for first scan)
%FX6163	_ALL_OFF	BOOL	-	All output Off	On in case all outputs are off
%FX30720	_RTC_WR	BOOL	Available	Writing data to RTC	Write data to RTC and Read
%FX30721	_SCAN_WR	BOOL	Available	Initialize scan value	Initialize scan value
%FX30722	_CHK_ANC_ERR	BOOL	Available	Request for detecting heavy fault of external device	Flag that requests detecting heavy fault of external
%FX30723	_CHK_ANC_WAR	BOOL	Available	Request for detecting light fault of external device	Flag that requests detecting light fault (warning) of external
%FX30724	_MASTER_CHG	BOOL	Available	Master/Standby switching	Flag used when switching master/standby
%FW3860	_RTC_TIME_USER	ARRAY[0..7] OF BYTE	Available	Time to set	Flag for user to set time (year, month, hour, minute, second, day, century available)

Appendix 1.2 System Error Representative Flag

1. Master CPU system error representative flag

Address	Flag name	Type	Bit position	Contents	Description
%FD65	_CNF_ER	DWORD	Representative flag	System error (heavy fault error)	Handles error flags about non-operation fault error as below.
%FX2081	_IO_TYER	BOOL	BIT 1	Error when Module type mismatched	Representative flag displayed when I/O configuration parameter for each slot is not matched with practical module configuration or a specific module is applied in the wrong location. (Refer to "_IO_TYER_N, _IO_TYER[n]")
%FX2082	_IO_DEER	BOOL	BIT 2	Module detachment error	Representative flag displayed when the module configuration for each slot is changed while running. (Refer to "_IO_DEER_N, _IO_DEER[n]")
%FX2083	_FUSE_ER	BOOL	BIT 3	Fuse cutoff error	Representative flag displayed when the fuse of module is cut off. (Refer to "_FUSE_ER_N, _FUSE_ER[n]")
%FX2086	_ANNUM_ER	BOOL	BIT 6	Heavy fault detection error in external device	Representative flag displayed when heavy fault error detected by user program is recorded in "_ANC_ERR[n]".
%FX2088	_BPRM_ER	BOOL	BIT 8	Basic parameter error	Basic parameter doesn't match CPU type.
%FX2089	_IOPRM_ER	BOOL	BIT 9	I/O parameter error	It is abnormal to the I/O configuration parameter.
%FX2090	_SPPRM_ER	BOOL	BIT 10	Special module parameter error	It is abnormal to the special module parameter.
%FX2091	_CPPRM_ER	BOOL	BIT 11	Communication module parameter error	It is abnormal to the communication module parameter.
%FX2092	_PGM_ER	BOOL	BIT 12	Program error	Indicates that there is problem with user-made program.
%FX2093	_CODE_ER	BOOL	BIT 13	Program code error	Indicates that while user program is running, the program code can't be interpreted.
%FX2094	_SWDT_ER	BOOL	BIT 14	CPU abnormal ends.	Displayed when the saved program gets damages by an abnormal end of CPU or program cannot work.
%FX2095	_BASE_POWER_ER	BOOL	BIT 15	Abnormal base power	Base power off or power module error
%FX2096	_WDT_ER	BOOL	BIT 16	Scan watchdog error	Indicates that the program scan time exceeds the scan watchdog time specified by a parameter.
%FX2097	_BASE_INFO_ER	BOOL	BIT 17	Base information error	Base information is abnormal
%FX2102	_BASE_DEER	BOOL	BIT 22	Extension base detachment error	Extension base is detatched
%FX2103	_DUPL_PRM_ER	BOOL	BIT 23	Redundant parameter error	Abnormal Redundant parameter
%FX2104	_INSTALL_ER	BOOL	BIT 24	Module attachment position error	The module which can't be inserted into main base is inserted in to main base or The module which can't be inserted into extension base is inserted in to extension base

Address	Flag name	Type	Bit position	Contents	Description
%FX2105	_BASE_ID_ER	BOOL	BIT 25	Overlapped extension base number	extension base number is overlapped
%FX2106	_DUPL_SYNC_ER	BOOL	BIT 26	Redundant operation Sync. error	Synchronization between master and standby CPU is abnormal
%FX2107	_AB_SIDEKEY_ER	BOOL	BIT 27	A/B SIDE key overlap error	A,B side key of master, standby CPU are overlapped. They should be different.
%FX2110	_BASE_AB_ER	BOOL	BIT 30	Base abnormal configuration	Configure extension cable as Ring Topology and position detached base correctly. For information of detached base, refer to CPU error log
%FX2111	_SYS_CON_ER	BOOL	BIT 31	System configuration error	Abnormal system configuration Ex) - Master/Standby One ring or line configuration - Duplicated station number of extension base or Station number more than specification - Different station number in same base

2. Standby CPU System error representative flag

Address	Flag name	Type	Bit position	Contents	Description
%FD129	_SB_CNF_ER	DWORD	Representative flag	System error (heavy fault error)	Handles error flags about non-operation fault error as below.
%FX4129	_SB_IO_TYER	BOOL	BIT 1	Module type mismatch error	Attached module is different with I/O parameter or some module which can't be inserted into some slot is inserted some slot. Representative flag that detects them and displays (refer to _SB_IO_TYER_N, _SB_IO_TYERR)
%FX4130	_SB_IO_DEER	BOOL	BIT 2	Module detachment error	Representative flag displayed when the module configuration for each slot is changed while running. (refer to _SB_IO_DEER_N,_SB_IO_DEERR]
%FX4131	_SB_FUSE_ER	BOOL	BIT 3	Fuse cutoff error	Representative flag displayed when the fuse of module is cut off.
%FX4134	_SB_ANNUM_ER	BOOL	BIT 6	Heavy fault detection error in external device	Representative flag displayed when heavy fault error detected by user program is recorded in "_ANC_ERR[n]".
%FX4136	_SB_BPRM_ER	BOOL	BIT 8	Basic parameter error	Basic parameter doesn't match CPU type.
%FX4137	_SB_IOPRM_ER	BOOL	BIT 9	I/O parameter error	It is abnormal to the I/O configuration parameter
%FX4138	_SB_SPPRM_ER	BOOL	BIT 10	Special module parameter error	It is abnormal to the special module parameter.
%FX4139	_SB_CPPRM_ER	BOOL	BIT 11	Communication module parameter error	It is abnormal to the communication module parameter.
%FX4141	_SB_CODE_ER	BOOL	BIT 13	Program code error	Indicates that while user program is running, the program code can't be interpreted.
%FX4142	_SB_SWDT_ER	BOOL	BIT 14	CPU abnormal ends.	Displayed when the saved program gets damages by an abnormal end of CPU or program cannot work.
%FX4143	_SB_BASE_POWER_ER	BOOL	BIT 15	Abnormal base power	Base power off or power module error
%FX4144	_SB_WDT_ER	BOOL	BIT 16	Scan watchdog error	Indicates that the program scan time exceeds the scan watchdog time specified by a parameter.
%FX4145	_SB_BASE_INFO_ER	BOOL	BIT 17	Base information error	Base information is abnormal
%FX4150	_SB_BASE_DEER	BOOL	BIT 22	Extension base detachment error	Extension base is detached.
%FX4151	_SB_DUPL_PRM_ER	BOOL	BIT 23	Abnormal redundant parameter	Redundant parameter is Abnormal
%FX4152	_SB_INSTALL_ER	BOOL	BIT 24	Module attachment position error	The module which can't be inserted into main base is inserted in to main base or The module which can't be inserted into extension base is inserted in to extension base
%FX4153	_SB_BASE_ID_E	BOOL	BIT 25	Overlapped extension	extension base number is overlapped

Address	Flag name	Type	Bit position	Contents	Description
	R			base number	
%FX4154	_SB_DUPL_SYNC_ER	BOOL	BIT 26	Redundant operation Sync. error	Synchronization between master and standby CPU is abnormal
%FX4156	_SB_CPU_RUN_ER	BOOL	BIT 28	Standby CPU run error	Standby CPU fails to join redundant operation when MASTER CPU is error
%FX4158	_SB_BASE_AB_ER	BOOL	BIT 30	Base abnormal configuration	Configure extension cable as Ring Topology and position detached base correctly. For information of detached base, refer to CPU error log

Appendix 1.3 System Error Detail Flag

1. Master CPU system error detail flag

Address	Flag name	Type	Writable	Contents	Description
%FW424	_IO_TYERR	ARRAY[0..31] OF WORD	-	Module type mismatch error	Indicates slot and base where module mismatch error occurs
%FW456	_IO_DEERR	ARRAY[0..31] OF WORD	-	Module detachment error	Indicates slot and base where module detachment error occurs
%FW488	_FUSE_ERR	ARRAY[0..31] OF WORD	-	Fuse cutoff error	Indicates slot and base where fuse cutoff error occurs
%FD83	_BASE_DEERR	DWORD	-	Extension base detachment error	Indicates base where extension base is detached
%FD574	_BASE_POWER_FAIL	DWORD	-	Information of base where power module error occurs	Indicates base where power module error occurs
%FW416	_IO_TYER_N	WORD	-	Module type mismatch slot number	Indicates slot number where module type mismatch error occurs. When two or more occurs, first slot is indicated
%FW417	_IO_DEER_N	WORD	-	Module detachment slot number	Indicates slot number where module detachment error occurs. When two or more occurs, first slot is indicated
%FW418	_FUSE_ER_N	WORD	-	Fuse cutoff slot number	Indicates slot number Fuse cutoff error occurs. When two or more occurs, first slot is indicated
%FW1922	_ANC_ERR	WORD	Available	Heavy fault information of external device	Classifies the type of user defined error and writes value except 0. If detection of heavy fault is requested, it develops an external heavy fault detection error. By monitoring this flag, the user can know a reason of heavy fault.
%FX10849	_IO_ER_PMT	BOOL	-	Status of Ignoring IO module error	On when set to ignore IO module error
%FX10851	_CP_ER_PMT	BOOL	-	Status of Ignoring communication module error	On when set to ignore communication module error
%FX10850	_SP_ER_PMT	BOOL	-	Status of Ignoring special module error	On when set to ignore special module error
%FX10848	_FUSE_ER_PMT	BOOL	-	Status of Ignoring fuse error	On when set to ignore fuse module error

2. Standby CPU system error detail flag

Address	Flag name	Type	Writable	Contents	Description
%FD147	_SB_BASE_DEERR	DWORD	-	Extension base detachment error	Indicates base where extension base is detached
%FW588	_SB_IO_TYERR	WORD	-	Module type mismatch error	Indicates slot and base where module mismatch error occurs
%FW589	_SB_IO_DEERR	WORD	-	Module detachment error	Indicates slot and base where module detachment error occurs

Appendix 1.4 System Warning Representative Flag

1. MASTER CPU System warning representative flag

Address	Flag name	Type	Bit position	Contents	Description
%FD66	_CNF_WAR	DWORD	Representative flag	System warning	Representative flag displayed the system warning state
%FX2112	_RTC_ER	BOOL	BIT 0	RTC error	Indicates that RTC data is abnormal
%FX2114	_BASE_EXIST_WAR	BOOL	BIT 2	Not joined base	Warns there is base which doesn't join operation
%FX2115	_AB_SD_ER	BOOL	BIT 3	Stop by operation error	Stopped by abnormal operation
%FX2116	_TASK_ER	BOOL	BIT 4	Task collision	It is collided to the task
%FX2117	_BAT_ER	BOOL	BIT 5	Battery error	It is to the error in the battery state
%FX2118	_ANNUM_WAR	BOOL	BIT 6	External device fault	Indicates that the light fault in the external device is detected.
%FX2120	_HS_WAR	BOOL	BIT 8	High speed link	Abnormal HS parameter
%FX2121	_REDUN_WAR	BOOL	BIT 9	Redundant configuration warning	It is not single CPU RUN mode and redundant configuration is not configured
%FX2122	_OS_VER_WAR	BOOL	BIT 10	O/S version mismatch	OS versions between CPUs, extension managers, extension drive modules are different
%FX2123	_RING_WAR	BOOL	BIT 11	Ring topology configuration warning	Configure an extension cable as the Ring topology
%FX2132	_P2P_WAR	BOOL	BIT 20	P2P parameter	Abnormal P2P parameter
%FX2138	_SYS_CON_WAR	BOOL	BIT 26	System configuration warning	Extension redundancy system configuration warning -Master/standby ring changes into line -Master normal but standby error
%FX2140	_CONSTANT_ER	BOOL	BIT 28	Fixed cycle error	Fixed cycle error
%FX2141	_BASE_POWER_WAR	BOOL	BIT 29	Power module error warning	One or two power module is error
%FX2142	_BASE_SKIP_WAR	BOOL	BIT 30	Base skip cancelation warning	In case of canceling the base skip, base is different with IO parameter
%FX2143	_BASE_NUM_OVER_WAR	BOOL	BIT 31	Base number setting error	Base number of extension drive module is not 1~31

2. Standby CPU System warning representative flag

Address	Flag name	Type	Bit position	Contents	Description
%FD130	_SB_CNF_WAR	DWORD	Representative flag	System warning	Representative flag displayed the system warning state
%FX4160	_SB_RTC_ER	BOOL	BIT 0	RTC error	Indicates that RTC data is abnormal
%FX4162	_SB_BASE_EXIST_WAR	BOOL	BIT 2	Not joined base	Warns there is base which doesn't join operation
%FX4163	_SB_AB_SD_ER	BOOL	BIT 3	Stop by operation error	Stopped by abnormal operation
%FX4164	_SB_TASK_ER	BOOL	BIT 4	Task collision	It is collided to the task
%FX4165	_SB_BAT_ER	BOOL	BIT 5	Battery error	It is to the error in the battery state
%FX4166	_SB_ANNUM_WAR	BOOL	BIT 6	External device fault	Indicates that the light fault in the external device is detected.
%FX4168	_SB_HS_WAR	BOOL	BIT 8	High speed link	Abnormal HS parameter
%FX4170	_SB_OS_VER_WAR	BOOL	BIT 10	O/S version mismatch	OS versions between CPUs, extension managers, extension drive modules are different
%FX4171	_SB_RING_WAR	BOOL	BIT 11	Ring topology configuration warning	Configure an extension cable as the Ring topology
%FX4180	_SB_P2P_WAR	BOOL	BIT 20	P2P parameter	Abnormal P2P parameter
%FX4188	_SB_CONSTANT_ER	BOOL	BIT 28	Fixed cycle error	Fixed cycle error
%FX4189	_SB_BASE_POWER_WAR	BOOL	BIT 29	Power module error warning	One or two power module is error
%FX4190	_SB_BASE_SKIP_WAR	BOOL	BIT 30	Base skip cancelation warning	In case of canceling the base skip, base is different with IO parameter
%FX4191	_SB_BASE_NUM_OVER_WAR	BOOL	BIT 31	Base number setting error	Base number of extension drive module is not 1~31

Appendix 1.5 System Warning Detail Flag

1. Master CPU system warning detail flag

Address	Flag name	Type	Writable	Contents	Description
%FX2624	_HS_WARN	ARRAY[0..11] OF BOOL	-	Abnormal HS parameter	Relevant flag is on in case Hs parameter is abnormal
%FX2640	_P2P_WARN	ARRAY[0..7] OF BOOL	-	Abnormal P2P parameter	Relevant flag is on in case P2P parameter is abnormal P2P
%FD587	_BASE_ACPF_WAR	DWORD	-	Instantaneous power cutoff occurrence warning information	Indicates base where Instantaneous power cutoff occurs
%FW164	_HS_WAR_W	WORD	-	Abnormal HS parameter	Indicates abnormal HS link number by bit
%FW165	_P2P_WAR_W	WORD	-	Abnormal P2P parameter	Indicates abnormal P2P link number by bit
%FW1923	_ANC_WAR	WORD	-	Light fault information external device	Classifies the type of user defined error and writes value except 0. If detection of heavy fault is requested, it develops an external light fault detection error. By monitoring this flag, the user can know a reason of light fault.
%FW600~ %FW631	_BASE_INFO[0]~ _BASE_INFO[31]	WORD	-	Abnormal base power module	Indicates abnormal redundancy power module Ex) error in left power module on expansion base 1(12slot) – %FW601(_BASE_INFO[1]) 16#010C: 01 → left power module 0C → 12-slot expansion base Ex) error in right power module on expansion base 2(6slot) – %FW602(_BASE_INFO[2]) 16#0206: 02 → right power module 06 → 6-slot expansion base

2. Standby CPU system warning detail flag

Address	Flag name	Type	Writable	Contents	Description
%FX4672	_SB_HS_WARN	ARRAY[0..11] OF BOOL	-	Abnormal HS parameter	Relevant flag is on in case Hs parameter is abnormal
%FX4688	_SB_P2P_WARN	ARRAY[0..7] OF BOOL	-	Abnormal P2P parameter	Relevant flag is on in case P2P parameter is abnormal P2P
%FW292	_SB_HS_WAR_W	WORD	-	Abnormal HS parameter	Indicates abnormal HS link number by bit
%FW293	_SB_P2P_WAR_W	WORD	-	Abnormal P2P parameter	Indicates abnormal P2P link number by bit

Appendix 1.6 System Operation Status Information Flag

1. Master CPU system operation status information flag

Address	Flag name	Type	Bit position	Contents	Description
%FD64	_SYS_STATE	DWORD	Representative flag	PLC Mode and operation state	Indicates PLC mode and operation state of system.
%FX2048	_RUN	BOOL	BIT 0	RUN	Indicates CPU's operation status
%FX2049	_STOP	BOOL	BIT 1	STOP	
%FX2050	_ERROR	BOOL	BIT 2	ERROR	
%FX2051	_DEBUG	BOOL	BIT 3	DEBUG	
%FX2052	_LOCAL_CON	BOOL	BIT 4	Local control	Indicates operation mode changeable state only by the Mode key and XG5000.
%FX2054	_REMOTE_CON	BOOL	BIT 6	Remote Mode On	It is Remote control mode
%FX2058	_RUN_EDIT_DONE	BOOL	BIT 10	Editing during Run completed	Indicates completion of editing during Run
%FX2059	_RUN_EDIT_NG	BOOL	BIT 11	Editing during Run abnormally completed	Edit is ended abnormally during Run
%FX2060	_CMOD_KEY	BOOL	BIT 12	Operation mode change by key	Indicates Operation mode change by key
%FX2061	_CMOD_LPADT	BOOL	BIT 13	Operation mode change by local PADT	Indicates operation mode change by local PADT
%FX2062	_CMOD_RPADT	BOOL	BIT 14	Operation mode change by remote PADT	Indicates operation mode change by remote PADT
%FX2063	_CMOD_RLINK	BOOL	BIT 15	Operation mode change by remote communication module	Indicates operation mode change by remote communication module
%FX2064	_FORCE_IN	BOOL	BIT 16	Forced Input	Forced On/Off state about input contact
%FX2065	_FORCE_OUT	BOOL	BIT 17	Forced Output	Forced On/Off state about output contact
%FX2066	_SKIP_ON	BOOL	BIT 18	Input/Output Skip	I/O Skip on execution
%FX2067	_EMASK_ON	BOOL	BIT 19	Fault mask	Fault mask on execution
%FX2069	_USTOP_ON	BOOL	BIT 21	Stopped by STOP function	Stopped after scan completion by 'STOP' function while RUN mode operation.
%FX2070	_ESTOP_ON	BOOL	BIT 22	Stopped by ESTOP function	Instantly stopped by 'ESTOP' function while RUN mode operation.
%FW192	_SL_OS_VER	ARRAY[0..31] OF WORD	-	O/S version of extension drive module	Indicates O/S version of extension drive module
%FW600	_BASE_INFO	ARRAY[0..31] OF WORD	-	Base information	Indicates how many base is installed
%FB12	_RTC_TIME	ARRAY[0..7] OF BYTE	-	Current clock	Indicates current clock
%FX2072	_INIT_RUN	BOOL	-	Initialization task on execution	User defined Initialization program on execution.
%FX2074	_AB_SIDE	BOOL	-	CPU position	CPU position (A-SIDE: ON, B-SIDE: OFF)

Address	Flag name	Type	Bit position	Contents	Description
%FX2076	_PB1	BOOL	-	Program Code 1	Program code 1 is selected
%FX2077	_PB2	BOOL	-	Program Code 2	Program code 1 is selected
%FX30736	_INIT_DONE	BOOL	writable	Initialization task execution completion	If this flag is set by user's initial program, it is started to execution of scan program after initial program completion.
%FW584	_RTC_DATE	DATE	-	RTC's current date	Indicates RTC's current date
%FD67	_OS_VER	DWORD	-	O/S version	Indicates CPU O/S version
%FD68	_OS_DATE	DWORD	-	O/S data	Indicates CPU O/S data
%FD69	_CP_OS_VER	DWORD	-	Extension manager O/S version	Indicates extension manager O/S version
%FD573	_OS_TYPE	DWORD	-	For PLC classification	Whether it is provided to other division
%FW1081	_FALS_NUM	INT	-	FALS number	Indicates FALS number
%FD293	_RTC_TOD	TIME_OF_DAY	-	RTC's current clock	Indicates RTC's current clock RTC. (ms unit)
%FD582	_RUN_EDIT_CNT	UDINT	-	The no. of editing during Run	Indicates the no. of editing during Run
%FW140	_AC_F_CNT	UINT	-	The no. of instantaneous power cutoff	Indicates the no. of instantaneous power cutoff
%FW158	_POWER_OFF_CNT	UINT	-	The no. of power cutoff	Indicates the no. of power cutoff
%FW386	_SCAN_MAX	UINT	writable	Max. scan time	Indicates max. scan time after(unit: 0.1ms)
%FW387	_SCAN_MIN	UINT	writable	Min. scan time	Indicates min. scan time after Run
%FW388	_SCAN_CUR	UINT	writable	Current scan time	Indicates current scan time (unit 0.1ms)
%FW585	_RTC_WEEK	UINT	-	RTC's current day	Indicates RTC's current day
%FW141	_CPU_TYPE	WORD	-	CPU ID (XGR - 0xA801)	Indicates CPU type
%FW633	_RBANK_NUM	WORD	-	Currently used block no.	Indicates currently used block no.
%FD125	_BASE_SKIP_INFO	DWORD	-	Base skip information	Indicates base skip information
%FD124	_BASE_EMASK_INFO	DWORD	-	Base fault mask information	Indicates base fault mask information
%FW1372	_SLOT_EMASK_INFO	ARRAY[0..31] OF WORD	-	Slot fault mask information	Indicates slot fault mask information
%FW1404	_SLOT_SKIP_INFO	ARRAY[0..31] OF WORD	-	Slot skip information	Indicates slot skip information
%FW1752	_CYCLE_TASK_SCAN_TIME	ARRAY[0..31, 0..2] OF WORD	-	Fixed cycle task scan time	Indicates max./min./current scan time of fixed cycle task
%FX19040	_HS_ENABLE_STATE	ARRAY[0..11] OF BOOL	-	-	HS link enable/disable current state

Address	Flag name	Type	Bit position	Contents	Description
%FX31520	_HS_REQ	ARRAY[0..11] OF BOOL	-	-	HS link enable/disable request
%FX31536	_HS_REQ_NUM	ARRAY[0..11] OF BOOL	-	-	HS link enable/disable setting
%FX19072	_P2P_ENABLE_STATE	ARRAY[0..7] OF BOOL	-	-	P2P enable/disable current state
%FX31552	_P2P_REQ	ARRAY[0..7] OF BOOL	-	-	P2P enable/disable request
%FX31568	_P2P_REQ_NUM	ARRAY[0..7] OF BOOL	-	-	P2P enable/disable setting
%FW1436	_SOE_LOG_CNT	WORD	-	-	No. of SOE event
%FW1437	_SOE_LOG_ROTATE	WORD	-	-	SOE event rotation information
%FW1456	_SOE_READ_LOG_CNT	WORD	-	-	No. of SOE event read by user
%FW1457	_SOE_READ_LOG_ROTATE	WORD	-	-	Rotation information of SOE event read by user
%FX2111	_SYS_CON_ER	BOOL	-	-	System configuration error
%FX2138	_SYS_CON_WAR	BOOL	-	-	System configuration warning
%FX2137	_REF_WAR	BOOL	-	-	PLC CPU refresh error warning
%FX30729	_REF_WAR_CLR	BOOL	-	-	PLC CPU refresh error warning clear
%FD197	_REF_NG_CNT	DWORD	-	-	PLC CPU refresh NG counter
%FD196	_REF_OK_CNT	DWORD	-	-	PLC CPU refresh OK counter
%FD753	_REFRESH_NG_BASE	DWORD	-	REFRESH NG BASE	Indicates the bit map type. ex) Extension Base No. 2 : 16#00000004 (This occurs when there are no three consecutive responses to the extension base.)

2. Standby CPU system operation status information flag

Address	Flag name	Type	Bit position	Contents	Description
%FD128	_SB_SYS_STATE	DWORD	Representative flag	System information	Handles system information
%FX4096	_SB_RUN	BOOL	BIT 0	RUN	Indicates CPU's operation status
%FX4097	_SB_STOP	BOOL	BIT 1	STOP	
%FX4098	_SB_ERROR	BOOL	BIT 2	ERROR	
%FX4100	_SB_LOCAL_CON	BOOL	BIT 4	Local control	Local control mode
%FX4102	_SB_REMOTE_CON	BOOL	BIT 6	Remote mode On	Remote control mode
%FX4106	_SB_RUN_EDIT_DONE	BOOL	BIT 10	Editing during Run completed	Indicates completion of editing during Run
%FX4107	_SB_RUN_EDIT_NG	BOOL	BIT 11	Editing during Run abnormally completed	Edit is ended abnormally during Run
%FX4108	_SB_CMOD_KEY	BOOL	BIT 12	Operation mode change by key	Indicates Operation mode change by key
%FX4109	_SB_CMOD_LPADT	BOOL	BIT 13	Operation mode change by local PADT	Indicates operation mode change by local PADT
%FX4110	_SB_CMOD_RPADT	BOOL	BIT 14	Operation mode change by remote PADT	Indicates operation mode change by remote PADT
%FX4111	_SB_CMOD_RLINK	BOOL	BIT 15	Operation mode change by remote communication module	Indicates operation mode change by remote communication module
%FX4112	_SB_FORCE_IN	BOOL	BIT 16	Forced Input	Forced On/Off state about input contact
%FX4113	_SB_FORCE_OUT	BOOL	BIT 17	Forced Output	Forced On/Off state about output contact
%FX4114	_SB_SKIP_ON	BOOL	BIT 18	Input/Output Skip	I/O Skip on execution
%FX4115	_SB_EMASK_ON	BOOL	BIT 19	Fault mask	Fault mask on execution
%FX4117	_SB_USTOP_ON	BOOL	-	Stopped by STOP function	Stopped after scan completion by 'STOP' function while RUN mode operation.
%FX4118	_SB_ESTOP_ON	BOOL	-	Stopped by ESTOP function	Instantly stopped by 'ESTOP' function while RUN mode operation.
%FD131	_SB_OS_VER	DWORD	-	O/S version	Indicates CPU O/S version
%FD132	_SB_OS_DATE	DWORD	-	O/S data	Indicates CPU O/S data
%FD133	_SB_CP_OS_VER	DWORD	-	O/S version of extension drive module	Indicates O/S version of extension drive module
%FW286	_SB_POWER_OFF	UINT	-	The no. of power cutoff	Indicates the no. of power cutoff

Address	Flag name	Type	Bit position	Contents	Description
	_CNT				
%FW269	_SB_CPU_TYPE	WORD	-	CPU ID (XGR - 0xA801)	Indicates CPU type
%FW632	_SB_BASE_INFO	WORD	-	Base information	Indicates how many base is installed.

Appendix 1.7 Redundant Operation Mode Information Flag

1. Redundant operation mode information

Address	Flag name	Type	Bit position	Contents	Description
%FD0	_REDUN_STATE	DWORD	Representative flag	Redundant operation information	Representative flag that indicates Redundant operation information
%FX0	_DUAL_RUN	BOOL	BIT 0	Redundant operation	Now Redundant operation CPU A, CPU B are normal
%FX1	_RING_TOPOLOGY	BOOL	BIT 1	Ring topology status	Extension base is configure as ring
%FX2	_LINE_TOPOLOGY	BOOL	BIT 2	Line topology status	Extension base is configure as line
%FX4	_SINGLE_RUN_A	BOOL	BIT 4	A-SIDE single Run mode	Indicates A-SIDE single Run mode
%FX5	_SINGLE_RUN_B	BOOL	BIT 5	B-SIDE single Run mode	Indicates B-SIDE single Run mode
%FX6	_MASTER_RUN_A	BOOL	BIT 6	A-SIDE is master Run mode (Incase standby CPU exists)	Indicates A-SIDE is master Run mode
%FX7	_MASTER_RUN_B	BOOL	BIT 7	B-SIDE is master Run mode (Incase standby CPU exists)	Indicates B-SIDE is master Run mode
%FX2016	_EXT_REDUN	BOOL	-	-	Extension redundancy system
%FX2017	_SB_EXT_REDUN	BOOL	-	-	Standby: extension redundancy system
%FW1458	_SL_OS_VER_B	ARRAY[0..31] OF WORD	-	-	Extension drive module OS version (B-side)
%FX4080	_SB_RING_TOPOLOGY	BOOL	-	-	Standby: ring topology state
%FX4081	_SB_LINE_TOPOLOGY	BOOL	-	-	Standby: line topology state

Appendix1.8 Operation Result Information Flag

1. Operation Result Information Flag

Address	Flag name	Type	Writable	Contents	Description
%FX672	_ARY_IDX_ERR	BOOL	Writable	Index range excess error in case of using array	In case of using array, index is out of setting value's range
%FX704	_ARY_IDX_LER	BOOL	Writable	Index range excess error latch in case of using array	Error occurred when index is out of setting value's range, in case of using array, is kept and the user erases this by program
%FX6160	_ERR	BOOL	Writable	Operation error flag	As an operation error flag by unit of operation function (FN) or function block (FB), it is renewed every operation
%FX6165	_LER	BOOL	Writable	Operation error latch flag	Operation error latch flag by program block (PB) unit. Error is kept until relevant program ends and the user erases this by program

Appendix 1.9 Operation mode Key Status Flag

1. Operation mode key status flag

Address	Flag name	Type	Writable	Contents	Description
%FX291	_REMOTE_KEY	BOOL	-	Remote key status information	CPU key position status information- (remote: off, not remote: On)
%FX294	_STOP_KEY	BOOL	-	Stop key status information	CPU key position status information- (Stop: off, not stop: On)
%FX295	_RUN_KEY	BOOL	-	Run key status information	CPU key position status information- (Run: off, not Run: On)

Appendix 1.10 Link Flag (L) List

It describes data link (L) flag

[Table 1.10.1] Communication Flag List according to High speed link no. (High speed link no. 1 ~ 12)

Item	Keyword	Type	Content	Description
HS link	_HSn_RLINK	Bit	High speed link parameter “n” normal operation of all station	Indicates normal operation of all station according to parameter set in High speed link, and On under the condition as below. 1. In case that all station set in parameter is RUN mode and no error, 2. All data block set in parameter is communicated normally, and 3. The parameter set in each station itself is communicated normally. Once RUN_LINK is On, it keeps On unless stopped by LINK_DISABLE.
	_HSn_LTRBL	Bit	Abnormal state after _HSn_RLINK ON	In the state of _HSmRLINK flag On, if communication state of the station set in the parameter and data block is as follows, this flag shall be On. 1. In case that the station set in the parameter is not RUN mode, or 2. There is an error in the station set in the parameter, or 3. The communication state of data block set in the parameter is not good. LINK TROUBLE shall be On if the above 1, 2 & 3 conditions occur, and if the condition return to the normal state, it shall be Off again.
	_HSn_STATE[k] (k=000~127)	Bit Array	High speed link parameter “n”, k block general state	Indicates the general state of communication information for each data block of setting parameter. HS1STATEk=HS1MODk&_HS1TR X k&(~_HSnERRk)
	_HSn_MOD[k] (k=000~127)	Bit Array	High speed link parameter “n”, k block station RUN operation mode	Indicates operation mode of station set in k data block of parameter.
	_HSn_TRX[k] (k=000~127)	Bit Array	Normal communication with High speed link parameter “n”, k block station	Indicates if communication state of k data of parameter is communicated smoothly according to the setting.
	_HSn_ERR[k] (k=000~127)	Bit Array	High speed link parameter “n”, k block station operation error mode	Indicates if the error occurs in the communication state of k data block of parameter.
	_HSn_SETBLOCK[k]	bit Array	High speed link parameter “n”, k block setting	Indicates whether or not to set k data block of parameter.

Notes

High Speed Link no.	L area address	Remarks
1	L000000~L00049F	Comparing with High speed link 1 from [Table 1], the flag address of different high speed link station no. is as follows by a simple calculation formula. ∗ Calculation formula : L area address = L000000 + 500 x (High speed link no. – 1) In case of using high speed line flag for Program and monitoring, you can use the flag map registered in XG5000 conveniently.
2	L000500~L00099F	
3	L001000~L00149F	
4	L001500~L00199F	
5	L002000~L00249F	
6	L002500~L00299F	
7	L003000~L00349F	
8	L003500~L00399F	
9	L004000~L00449F	
10	L004500~L00499F	
11	L005000~L00549F	

k means block no. and appears 8 words by 16 per 1 word for 128 blocks from 000~127.
For example, mode information (_HS1MOD) appears from block 0 to block 15 for L00010, and block 16~31, 32~47, 48~63, 64~79, 80~95, 96~111, 112~127 information for L00011, L00012, L00013, L00014, L00015, L00016, L00017. Thus, mode information of block no. 55 appears in L000137.

[Table 2] Communication Flag List according to P2P Service Setting

P2P parameter no.(n) : 1~8, P2P block(xx) : 0~63

No.	Keyword	Type	Contents	Description
P2P	_P2Pn_NDRxx	Bit	P2P parameter n, xx Block service normal end	Indicates P2P parameter n, xx Block service normal end
	_P2Pn_ERRxx	Bit	P2P parameter n, xx Block service abnormal end	Indicates P2P parameter n, xx Block service abnormal end
	_P2Pn_STATUSxx	Word	P2P parameter n, xx Block service abnormal end error Code	Indicates error code in case of P2P parameter n, xx Block service abnormal end
	_P2Pn_SVCCNTxx	Double word	P2P parameter n, xx Block service normal count	Indicates P2P parameter n, xx Block service normal count
	_P2Pn_ERRCNTxx	Double word	P2P parameter n, xx Block service abnormal count	Indicates P2P parameter n, xx Block service abnormal count

Appendix 1.11 Reserved Word

The reserved words are predefined words to use in the system.
Therefore, it is impossible to use them as the identifier.

Reserved Words
ACTION ... END_ACTION
ARRAY ... OF
AT
CASE ... OF ... ELSE ... END_CASE CONFIGURATION ... END_CONFIGURATION
Name of Data Type
DATE#, D# DATE_AND_TIME#, DT#
EXIT
FOR ... TO ... BY ... DO ... END_FOR
FUNCTION ... END_FUNCTION
FUNCTION_BLOCK ... END_FUNCTION_BLOCK
Names of Function Block
IF ... THEN ... ELSIF ... ELSE ... END_IF
OK
Operator (IL Language) Operator (ST Language)
PROGRAM
PROGRAM ... END_PROGRAM
REPEAT ... UNTIL ... END_REPEAT
RESOURCE ... END_RESOURCE
RETAIN
RETURN
STEP ... END_STEP
STRUCTURE ... END_STRUCTURE
T#
TASK ... WITH
TIME_OF_DAY#, TOD#
TRANSITION ... FROM... TO ... END_TRANSITION
TYPE ... END_TYPE
VAR ... END_VAR VAR_INPUT ... END_VAR VAR_OUTPUT ... END_VAR VAR_IN_OUT ... END_VAR VAR_EXTERNAL ... END_VAR
VAR_ACCESS ... END_VAR
VAR_GLOBAL ... END_VAR
WHILE ... DO ... END_WHILE
WITH

Warranty

1. Warranty Period
   The product you purchased will be guaranteed for 36 months from the date of manufacturing.

2. Scope of Warranty
   (1) The initial diagnosis of faults is basically conducted by your company. However, upon your request, our company or our service network can undertake this task for a fee. If the cause of the fault lies with our company, this service will be provided free of charge.
   (2) This warranty only applies if the product is used under normal conditions according to the specifications and precautions described in the handling instructions, user manuals, catalogs, and caution labels.
   (3) Even within the free warranty period, the following cases will be subject to paid repairs:
   1) Replacement of consumable and life-limited parts (e.g., relays, fuses, electrolytic capacitors, fans, LCDs, batteries, etc.)
   2) Failures or damages caused by improper storage, handling, negligence, or accidents by the customer
   3) Failures resulting from the customer's hardware or software design
   4) Failures due to modifications without our consent
   (Repairs will be refused, even for a fee, if recognized as modified or repaired outside our company)
   5) Failures that could have been avoided if the customer's equipment, in which our product is incorporated, had safety devices required by legal regulations or common industry standards
   6) Failures that could have been prevented if maintenance and replacement of consumable parts were performed normally according to the handling instructions or user manuals
   7) Failures and damages to the product caused by using connected equipment or inappropriate consumables
   8) Failures caused by external factors such as fire, abnormal voltage, force majeure, and natural disasters such as earthquakes, lightning, salt damage, wind, and flood damage
   9) Failures due to reasons that could not be predicted with the scientific and technical standards at the time of our shipment
   10) Other failures, damages, or defects recognized as the responsibility of your company

Environmental Policy

LS ELECTRIC Co., Ltd supports and observes the environmental policy as below.

Environmental Management

LS ELECTRIC considers the environmental preservation as the preferential management subject and every staff of LS ELECTRIC use the reasonable endeavors for the pleasurably environmental preservation of the earth.

About Disposal

LS ELECTRIC' PLC unit is designed to protect the environment. For the disposal, separate aluminum, iron and synthetic resin (cover) from the product as they are reusable.

www.ls-electric.com

LS ELECTRIC Co., Ltd.

■ Headquarter
LS-ro 127(Hogye-dong) Dongan-gu, Anyang-si, Gyeonggi-Do, 14119, Korea
■ Seoul Office
LS Yongsan Tower, 92, Hangang-daero, Yongsan-gu, Seoul, 04386, Korea
Tel: 82-2-2034-4033, 4888, 4703 Fax: 82-2-2034-4588
E-mail: automation@ls-electric.com

■ Overseas Subsidiaries
• LS ELECTRIC Japan Co., Ltd. (Tokyo, Japan)
Tel: 81-3-6268-8241 E-Mail: japan@ls-electric.com
• LS ELECTRIC (Dalian) Co., Ltd. (Dalian, China)
Tel: 86-411-8730-6495 E-Mail: china.dalian@lselectric.com.cn
• LS ELECTRIC (Wuxi) Co., Ltd. (Wuxi, China)
Tel: 86-510-6851-6666 E-Mail: china.wuxi@lselectric.com.cn
• LS ELECTRIC Middle East FZE (Dubai, U.A.E.)
Tel: 971-4-886-5360 E-Mail: middleeast@ls-electric.com
• LS ELECTRIC Europe B.V. (Hoofddorp, Netherlands)
Tel: 31-20-654-1424 E-Mail: europartner@ls-electric.com
• LS ELECTRIC America Inc. (Chicago, USA)
Tel: 1-800-891-2941 E-Mail: sales.us@lselectricamerica.com
• LS ELECTRIC Turkey Co., Ltd.
Tel: 90-212-806-1225 E-Mail: turkey@ls-electric.com

■ Overseas Branches
• LS ELECTRIC Tokyo Office (Japan)
Tel: 81-3-6268-8241 E-Mail: tokyo@ls-electric.com
• LS ELECTRIC Beijing Office (China)
Tel: 86-10-5095-1631 E-Mail: china.auto@lselectric.com.cn
• LS ELECTRIC Shanghai Office (China)
Tel: 86-21-5237-9977 E-Mail: china.auto@lselectric.com.cn
• LS ELECTRIC Guangzhou Office (China)
Tel: 86-20-3818-2883 E-Mail: china.auto@lselectric.com.cn
• LS ELECTRIC Chengdu Office (China)
Tel: 86-28-8670-3201 E-Mail: china.auto@lselectric.com.cn
• LS ELECTRIC Qingdao Office (China)
Tel: 86-532-8501-2065 E-Mail: china.auto@lselectric.com.cn
• LS ELECTRIC Nanjing Office (China)
Tel: 86-25-8467-0005 E-Mail: china.auto@lselectric.com.cn
• LS ELECTRIC Bangkok Office (Thailand)
Tel: 66-90-950-9683 E-Mail: thailand@ls-electric.com
• LS ELECTRIC Jakarta Office (Indonesia)
Tel: 62-21-2933-7614 E-Mail: indonesia@ls-electric.com
• LS ELECTRIC Moscow Office (Russia)
Tel: 7-499-682-6130 E-Mail: info@lselectric-ru.com
• LS ELECTRIC America Western Office (Irvine, USA)
Tel: 1-949-333-3140 E-Mail: america@ls-electric.com

Disclaimer of Liability
LS ELECTRIC has reviewed the information in this publication to ensure consistency with the hardware and software described. However, LS ELECTRIC cannot guarantee full consistency, nor be responsible for any damages or compensation, since variance cannot be precluded entirely. Please check again the version of this publication before you use the product.
ⓒ LS ELECTRIC Co., Ltd 2015 All Right Reserved.

2024.06